FMB640 User Manual
V1.0

Table of contents

1 INTRODUCTION 9

1.1 ATTENTION 9
1.2 INSTRUCTIONS OF SAFETY 10
1.3 LEGAL NOTICE 10
1.4 ABOUT DOCUMENT 10

2 BASIC DESCRIPTION 11

2.1 PACKAGE CONTENTS 11
2.2 BASIC CHARACTERISTICS 11
2.3 MECHANICAL FEATURES 12
2.4 TECHNICAL INFORMATION ABOUT INTERNAL BATTERY! 13
2.4.1 Battery Disposal instructions: 14
2.5 ELECTRICAL CHARACTERISTICS 14
2.6 ABSOLUTE MAXIMUM RATINGS 16

3 CONNECTION AND PINOUT 16

3.1 SIM CARD INSERT SCHEME 16
3.2 INSTALLING FMB640 DRIVERS 18
3.3 NAVIGATE LED 19
3.4 STATUS LED 19
3.5 SOCKET 2?10 PINOUT 20
3.6 USB 21
3.7 ACCESSORIES 21

4 FIRMWARE 28

4.1 UPDATING FIRMWARE USING USB CABLE 28

5 OPERATIONAL BASICS 29

5.1 OPERATIONAL PRINCIPLES 29
5.2 OPERATIONAL MODES 29
5.3 ACCELEROMETER 30
5.4 VIRTUAL ODOMETER 30

6 CONFIGURATOR & FEATURES 30

6.1 STARTUP 30
6.2 CONFIGURATOR STRUCTURE 31
6.3 HEADER BUTTONS AREA 32
6.4 PARAMETERS CONFIGURATION 32
6.4.1 Sidebar buttons area 32
6.4.2 Status info 33
6.4.3 Security info 33
6.4.4 System settings 34
6.4.5 GPRS 35
6.4.6 Data Acquisition 36
6.4.6.1 I/O Data acquisition 38
6.4.7 SMS/Call Settings 39
6.4.8 SMS Events 40
6.4.9 GSM Operators 40
6.4.10 Features & Scenarios 40
Over Speeding Scenario 44
6.4.11 Accelerometer Features 47
6.4.12 Auto Geofence 49
6.4.13 Manual Geofence 49
6.4.14 Trip \ Odometer 50

6.4.15 Blue-tooth *51*
6.4.15.1 Blue-tooth log 52
6.4.15.2 Blue-tooth Headset 52
6.4.16 iButton List *53*
6.4.17 I/O *53*
6.4.17.1 I/O properties 58
6.4.18 LVCAN *60*
6.4.19 FMS IO *61*
6.4.20 Tachograph serial data *76*
6.4.21 RS232 \ RS485 ..... *79*
6.4.21.1 RS485 79
6.4.21.2 RS232 COM1 and COM2 working modes 82
6.4.21.3 Garmin FMI 84
6.4.22 CAN \ Tachograph *85*

7 DUAL SIM FUNCTIONALITY 85

7.1.1 Dual SIM algorithm *86*

8 SLEEP MODE 87

9 DEEP SLEEP MODE 88

10 ONLINE DEEP SLEEP MODE 88

11 SMS COMMAND LIST 89

11.1 GETSTATUS 90
11.2 GETNMEAINFO 90
11.3 GETCFGTIME 91
11.4 GETGPS 91
11.5 CPURESET 91
11.6 RESETALLPROF 91
11.7 GETVER 91
11.8 GETIO 92
11.9 GETINFO 92
11.10 DELETERECORDS 92
11.11 READIO # 92
11.12 SETDIGOUT #### X Y Z W 92
11.13 GETPARAM # 93
11.14 SETPARAM <PARAMETERID>:<VALUE> 93
11.15 FLUSH #,#,#,#,#,#,# 93
11.16 GETGNSS 94
11.17 BANLIST 94
11.18 BRAMINFO 94
11.19 ODINFO 94

12 PARAMETER LIST 95

12.1 SYSTEM PARAMETERS 95
12.1.1 Sleep Mode (ID=102) *95*
12.1.2 Sleep timeout (ID=103) *96*
12.1.3 Static Navigation (ID=106) *96*
12.1.4 Save records to (ID=1003) *96*
12.1.5 Analog input value range (ID=111) *96*
12.1.6 Analog Input Value Range 3-4 (ID=114) *96*
12.1.7 AIN4/DOUT4 Mode (ID=115) *96*
12.1.8 J1708 settings (ID=116) *96*
12.1.9 Odometer Source Settings (ID=117) *97*
12.1.10 Speed Source settings (ID=118) *97*
12.1.11 Saving/Sending without (TS) time synchronization (ID=107) *97*
12.1.12 Ping mode (ID=1004) *97*
12.1.13 Ping timeout (min.) (ID=1005) *97*

12.1.14 GNSS Source (ID=109) *97*
12.1.15 Ignition settings (ID=101) *98*
12.1.16 Sets High voltage level (ID=104) *98*
12.1.17 Low voltage level (ID=105) *98*
12.1.18 Movement Start Delay(s) (ID=19001) *98*
12.1.19 Movement Stop Delay(s) (ID=19002) *98*
12.1.20 Synchronization settings (ID=900) *99*
12.1.21 NTP Resync (ID=901) *99*
12.1.22 NTP server 1 (ID=902) *99*
12.1.23 NTP server 2 (ID=903) *99*
12.2 GPRS PARAMETERS 99
12.2.1 Sorting (ID=1002) *99*
12.2.2 Open Link Timeout (ID=1000) *100*
12.2.3 Server Response Timeout (ID=1001) *100*
12.2.4 SIM1 GPRS content activation (ID=2000) *100*
12.2.5 SIM1 APN Name (ID=2001) *100*
12.2.6 SIM1 APN username (ID=2002) *101*
12.2.7 SIM1 APN Password (ID=2003) *101*
12.2.8 SIM2 GPRS content activation (ID=2011) *101*
12.2.9 SIM2 APN Name (ID=2012) *101*
12.2.10 SIM2 APN username (ID=2013) *102*
12.2.11 SIM2 APN Password (ID=2014) *102*
12.2.12 Server #1 Domain (ID=2004) *102*
12.2.13 Target Server #1 Port (ID=2005) *102*
12.2.14 Server #1 Protocol (ID=2006) *102*
12.2.15 Server #2 Server Domain (ID=2007) *103*
12.2.16 Server #2 Server Port (ID=2008) *103*
12.2.17 2nd Server Protocol (ID=2009) *103*
12.2.18 FOTA WEB status (ID=13003) *103*
12.2.19 FOTA WEB Domain (ID=13000) *103*
12.2.20 FOTA WEB port (ID=13001) *104*
12.2.21 FOTA WEB Period (min) (ID=13002) *104*
12.3 SMS/CALL SETTINGS 104
12.3.1 SMS data sending settings (ID=3000) *104*
12.3.2 Data send number (ID=3001) *104*
12.3.3 Authorized phone numbers (ID=4000-4199) *104*
12.3.4 SMS Events AVL ID list (ID=9000-9009) *104*
12.3.5 GSM Predefined Numbers (ID=7000-7009) *105*
12.3.6 SMS Login (ID=3003) *105*
12.3.7 SMS Password (ID=3004) *105*
12.3.8 Incoming call action (ID=3005) *105*
12.3.9 SMS Event Time Zone (ID=3006) *105*
12.3.10 DIN 1 Call Trigger (ID=3009) *105*
12.3.11 DIN1 GSM Number (ID=3010) *106*
12.3.12 DIN 2 Call Trigger (ID=3011) *106*
12.3.13 DIN2 GSM Number (ID=3012) *106*
12.3.14 DIN 3 Call Trigger (ID=3013) *106*
12.3.15 DIN 3 GSM Number (ID=3014) *106*
12.3.16 DIN 4 Call Trigger (ID=3015) *106*
12.3.17 DIN 4 GSM Number (ID=3016) *106*
12.4 GSM OPERATORS 107
12.4.1 SIM1 Roaming Operator List (ID=5000-5049) *107*
12.4.2 SIM2 Roaming/ Home Operator List (ID=9500-9549) *107*
12.4.3 Black List (ID=5500-5549) *107*
12.5 DATA ACQUISITION PARAMETERS 107
12.5.1 Home Network GSM operator code "Vehicle on STOP" parameters *107*
12.5.1.1 Min Period (ID=10000) 107
12.5.1.2 Min Saved Records (ID=10004) 107

12.5.1.3 Send Period (ID=10005) ... 108
12.5.2 Home Network GSM operator code "Vehicle MOVING" parameters ... 108
12.5.2.1 Min Period (ID=10050) ... 108
12.5.2.2 Min Distance (ID=10051) ... 108
12.5.2.3 Min Angle (ID=10052) ... 108
12.5.2.4 Min Speed Delta (ID=10053) ... 109
12.5.2.5 Min Saved Records (ID=10054) ... 109
12.5.2.6 Send Period (ID=10055) ... 109
12.5.3 Roaming Network GSM operator code "Vehicle on STOP" parameters ... 109
12.5.3.1 Min Period (ID=10100) ... 109
12.5.3.2 Min Saved Records (ID=10104) ... 110
12.5.3.3 Send Period (ID=10105) ... 110
12.5.4 Roaming Network GSM operator code "Vehicle MOVING" parameters ... 110
12.5.4.1 Min Period (ID=10150) ... 110
12.5.4.2 Min Distance (ID=10151) ... 110
12.5.4.3 Min Angle (ID=10152) ... 110
12.5.4.4 Min Speed Delta (ID=10153) ... 111
12.5.4.5 Min Saved Records (ID=10154) ... 111
12.5.4.6 Send Period (ID=10155) ... 111
12.5.5 Unknown Network GSM operator code "Vehicle on STOP" parameters ... 112
12.5.5.1 Min Period (ID=10200) ... 112
12.5.5.2 Min Saved Records (ID=10204) ... 112
12.5.5.3 Send Period (ID=10205) ... 112
12.5.6 Unknown Network GSM operator code "Vehicle MOVING" parameters ... 112
12.5.6.1 Min Period (ID=10250) ... 112
12.5.6.2 Min Distance (ID=10251) ... 113
12.5.6.3 Min Angle (ID=10252) ... 113
12.5.6.4 Min Speed Delta (ID=10253) ... 113
12.5.6.5 Min Saved Records (ID=10254) ... 113
12.5.6.6 Send Period (ID=10255) ... 114
12.6 FEATURES PARAMETERS ... 114
12.6.1 Green driving parameters ... 114
12.6.1.1 Max Acceleration Force (ID=11004) ... 114
12.6.1.2 Max Braking Force (ID=11005) ... 114
12.6.1.3 Max Cornering (ID=11006) ... 115
12.6.1.4 Green/Eco driving (ID=11007) ... 115
12.6.1.5 Green driving digital output control settings (ID=11003) ... 115
12.6.1.6 Acceleration Digital output on duration (ID=11009) ... 116
12.6.1.7 Braking Digital output on duration (ID=11010) ... 116
12.6.1.8 Cornering Digital output on duration (ID=11011) ... 116
12.6.2 Overspeeding scenario parameters ... 116
12.6.2.1 Max allowed Speed (ID=11104) ... 116
12.6.2.2 Overspeeding output control (ID=11103) ... 117
12.6.3 Jamming scenario parameters ... 117
12.6.3.1 Jamming Eventual records (ID=11303) ... 117
12.6.3.2 Jamming Output Control (ID=11304) ... 117
12.6.3.3 Jamming Sensitivity Control (ID=11306) ... 117
12.6.3.4 Time Until Jamming Event Detection(ID=11305) ... 118
12.6.3.5 Jamming DOUT on duration [ms] (ID=11301) ... 118
12.6.4 Immobilizer scenario parameters ... 118
12.6.4.1 Eventual records (ID=11701) ... 118
12.6.4.2 Output control (ID=11702) ... 119
12.6.4.3 iButton list check (ID=11703) ... 119
12.6.5 Trip scenario parameters ... 119
12.6.5.1 Trip priority (ID=11800) ... 119
12.6.5.2 Eventually Records (ID=11801) ... 119
12.6.5.3 Trip mode (ID=11802) ... 120
12.6.5.4 Start Speed (ID=11803) ... 120
12.6.5.5 Ignition Off Timeout (ID=11804) ... 120
12.6.5.6 Total Odometer value (ID=11807) ... 121
12.6.5.7 Remember iButton ID (ID=11805) ... 121
12.6.6 iButton read notification ... 121
12.6.6.1 Digital Output control (ID=11704) ... 121

12.6.6.2 Duration timeout [ms] (ID=11705) 121
12.7 AUTOGEOFENCING SCENARIO PARAMETERS 121
12.7.1 AutoGeofencing priority (ID=20000) *121*
12.7.2 Eventual Records (ID=20002) *122*
12.7.3 Activation Timeout (ID=20003) *122*
12.7.4 Deactivate by (ID=20005) *122*
12.7.5 AutoGeofence event generating (ID=20001) *122*
12.7.6 Radius (ID=20004) *123*
12.8 MANUAL GEOFENCE 123
12.8.1 First Geozone parameters *123*
12.8.1.1 #1 Geozone Manual Geofencing priority (ID=20100) 123
12.8.1.2 #1 Geozone Manual Geofence event generating (ID=20101) 124
12.8.1.3 #1 Geozone Eventual Records (ID=20102) 124
12.8.1.4 #1 Geozone Frame border (ID=20103) 125
12.8.1.5 #1 Geozone Shape type (ID=20104) 125
12.8.1.6 #1 Geozone Radius (ID=20105) 126
12.8.1.7 #1 Geozone X1 (ID=20106) 126
12.8.1.8 #1 Geozone Y1 (ID=20107) 127
12.8.1.9 #1 Geozone X2 (ID=20108) 127
12.8.1.10 #1 Geozone X1 (ID=20109) 128
12.8.1.11 #1 Geozone OverSpeeding DOUT control (ID=20110) 128
12.8.1.12 #1 Geozone Max allowed speed (ID=20111) 128
12.8.2 Other Geozones *129*
12.9 ACCELEROMETER FEATURES 129
12.9.1 Towing Detection *129*
12.9.1.1 Scenario setting (ID=11600) 129
12.9.1.2 Eventual Records (ID=11601) 129
12.9.1.3 Activation Timeout (min) (ID=11602) 130
12.9.1.4 Event Timeout (s) (ID=11603) 130
12.9.1.5 Treshold (mg) (ID=11605) 130
12.9.1.6 Angle (deg) (ID=11606) 131
12.9.1.7 Make Call To (ID=11604) 131
12.9.1.8 Duration (msec) (ID=11607) 131
12.9.2 Crash Detection *131*
12.9.2.1 Scenario settings (ID=11400) 131
12.9.2.2 Duration [ms] (ID=11401) 131
12.9.2.3 Treshold [mG] (ID=11402) 132
12.9.3 Excessive idling *132*
12.9.3.1 Excessive idling priority (ID=11200) 132
12.9.3.2 Eventual records (ID=11203) 132
12.9.3.3 Excessive idling time to stopped (ID=11205) 132
Excessive idling time to moving (ID=11206) 133
12.10 BLUE-TOOTH 133
12.10.1.1 BT Radio (ID=800) 133
12.11 IBUTTON LIST (ID=30000 – 30500) 133
12.12 I/O PARAMETERS 133
12.12.1 I/O#1 property parameter priority Ignition (ID=50000) *133*
12.12.2 I/O#1 operand (ID=50001) *134*
12.12.3 I/O#1 High level (ID=50002) *134*
12.12.4 I/O#1 Low level (ID=50003) *134*
12.12.5 I/O#1 Event only (ID=50004) *134*
12.12.6 I/O#1 averaging length (ID=50005) *135*
12.12.7 I\O elements parameters and types. *135*
12.13 LVCAN 143
12.13.1 LVCAN Mode (ID = 45000) *143*
12.13.2 Send data with 0, if ignition is off (ID = 45001) *143*
12.13.3 Program Number (ID = 45002) *144*
12.13.4 1st LVCAN property parameter priority (ID=45100) *144*
12.13.5 1st LVCAN property parameter operand (ID=45101) *144*
12.13.6 1st LVCAN property parameter High level (ID=45102) *144*
12.13.7 1st LVCAN property parameter Low level (ID=45103) *145*

12.13.8 1st LVCAN property parameter Event only (ID=45104) *145*
12.13.9 1st LVCAN property parameter averaging constant (ID=45105) *145*
12.13.10 All LVCAN I/O elements parameters property ID *146*
12.14 RS232\RS485 147
12.14.1 RS232 ..... *147*
12.14.1.1 RS232 working mode on COM1 (ID=151) and COM2 (ID=173) 147
12.14.1.2 RS232 Baudrate on COM1 (ID=152) and COM2 (ID=174) 148
12.14.2 Garmin Mode Settings (ID=157) *148*
12.14.3 RS485 ..... *148*
12.14.3.1 RS485 working mode (ID=160) 148
12.14.3.2 RS485 Baudrate (ID=161) 149
12.14.4 RS485 LLS Sensors *149*
12.14.4.1 LLS 1 Address (ID=162) 149
12.14.4.2 LLS 2 Address (ID=163) 149
12.14.4.3 LLS 3 Address (ID=164) 149
12.14.4.4 LLS 4 Address (ID=165) 150
12.14.4.5 LLS 5 Address (ID=166) 150
12.15 CAN \ TACHOGRAPH PARAMETERS 150
12.15.1 CAN1 Bus Settings *150*
12.15.1.1 CAN1 bus speed (kbps) (ID=205) 150
12.15.1.2 CAN1 bus mode (ID=206) 150
12.15.2 CAN2 Bus Settings *151*
12.15.2.1 CAN2 bus speed (kbps) (ID=207) 151
12.15.2.2 CAN2 bus mode (ID=208) 151
12.15.3 Tachograph Settings *151*
12.15.3.1 Tachograph DDD download source (ID=209) 151
12.15.3.2 Tachograph ignition source (ID=204) 151
12.15.4 WEB Tacho Settings *151*
12.15.4.1 WEB Tacho Status (ID=200) 151
12.15.4.2 WEB Tacho Domain (ID=201) 151
12.15.4.3 WEB Tacho Port (ID=202) 152
12.15.4.4 WEB Tacho start delay (min.) (ID=203) 152
12.15.5 FMS Settings *152*
12.15.5.1 FMS data source (ID=210) 152

13 FMB640 WITH LV-CAN 200 AND ALL-CAN 300 CAN ADAPTER 152

13.1 PURPOSE OF CAN ADAPTERS LV-CAN200 AND ALL-CAN300 152
13.2 LV-CAN200 AND ALL-CAN300 PROGRAM NUMBER SELECTION 153
13.2.1 LV-CAN200 and ALL-CAN300 program number configuration via SMS command *153*
13.2.2 Selecting LV-CAN200 and ALL-CAN300 program number manually *153*
13.2.3 Program number logic change *154*
13.3 SIMPLE-CAN - CONTACTLESS CAN-BUS READER 155
13.4 CONNECTING FMB640 CAN ADAPTERS ALL-CAN300 AND LV-CAN200 156
13.5 FMB640 CONFIGURATION WITH LV-CAN200 AND ALL-CAN300 157
LVCAN mode (ID=903) *159*
Send data with 0, if ignition is off (ID=904) *161*
13.6 PARAMETERS ID 161

14 CAN 167

14.1 GENERAL DESCRIPTION 168
14.2 FMB640 J1708 CONNECTION 168
14.3 SOFTWARE CONFIGURATION OF FMB640 WITH J1708 169
14.4 FMS CONFIGURATION OVER SMS 169
14.4.1 SMS command format: *169*
14.4.2 FMS element Id's *170*

15 USING TACHOGRAPH 171

15.1 CONNECTING TO TACHOGRAPH 171
15.2 WEB TACHO 173
15.3 TACHOCHECK SMS 174

16 RS485 INTERFACE 175

17 RFID 175

18 GARMIN 176

18.1 SUPPORTED GARMIN FMI PROTOCOLS 176
18.1.1 Standard protocols 177
18.1.2 Enhanced protocols 177
18.2 SUPPORTED FEATURES ON TAVL CLIENT APPLICATION 178
18.3 TEXT MESSAGING 178
18.4 DESTINATION MESSAGE 178
18.5 ETA REQUEST MESSAGE 178
18.6 CONNECTION AND PINOUT 179

19 LLS SENSOR 180

19.1 SPECIFICATIONS 180
19.2 HARDWARE 180
19.3 CONNECTING LLS TO FMB640 181

20 GPRS COMMANDS 181

21 DEBUG MODE 182

22 FMB640 REMOTE LOG 183

21. MOUNTING RECOMMENDATIONS 186

22.1 CONNECTING WIRES 186
22.2 CONNECTING POWER SOURCE 186
22.3 CONNECTING IGNITION WIRE 186
22.4 CONNECTING GROUND WIRE 186
22.5 CONNECTING ANTENNAS 187
22.6 MODULE INSTALLATION 187

23 EC DECLARATION OF CONFORMITY 188

24 WARRANTY POLICY 188

25 CHANGE LOG 188

1 INTRODUCTION

1.1 Attention

Do not disassemble the device. If the device is damaged, the power supply cables are not isolated or the isolation is damaged, before unplugging the power supply, do not touch the device.

All wireless data transferring devices produce interference that may affect other devices which are placed nearby.

The device must be connected only by qualified personnel.

The device must be firmly fastened in the predefined location.

The programming must be performed using a second class PC (with autonomic power supply).

The device is susceptible to water and humidity.

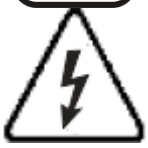

Any installation and/or handling during a lightning storm are prohibited.

FMB640 has USB interface;
Please use cables provided with FMB640 device.
Teltonika is not responsible for any harm caused by using wrong cables for PC <-> FMB640 connection.

This sign on the packaging means that the electric and electronic equipment to be utilized must be stored separately.

1.2 Instructions of safety

This chapter contains information on how to operate FMB640 safely. By following these requirements and recommendations, you will avoid dangerous situations. You must read these instructions carefully and follow them strictly before operating the device!

To avoid mechanical damage, it is advised to transport the FMB640 device in an impact-proof package. Before usage, the device should be placed so that its LED indicators are visible, which show the status of operation the device is in.

The device uses SELV limited power source. The allowed range of voltage is 10V…30V DC.

When connecting the connection (2x10) cables to the vehicle, the appropriate jumpers of the power supply of the vehicle should be disconnected.

Before dismounting the device from the vehicle, the 2x10 connection must be disconnected.

The device is designed to be mounted in a zone of limited access, which is inaccessible for the operator. All related devices must meet the requirements of standard EN 60950-1.

The device FMB640 is not designed as a navigational device for boats.

1.3 Legal Notice

Copyright © 2014 Teltonika. All rights reserved. Reproduction, transfer, distribution or storage of part or all of the contents in this document in any form without the prior written permission of Teltonika is prohibited.

Garmin and the Garmin logo are registered trademarks, all rights reserved.

Other products and company names mentioned here may be trademarks or trade names of their respective owners.

1.4 About document

This document contains information about the architecture, possibilities, mechanical characteristics, and configuration of the FMB640 device.

Acronyms and terms used in document:

PC – Personal Computer

GPRS – General Packet Radio Service

GPS – Global Positioning System

GSM – Global System for Mobile Communications

SMS – Short Message Service

AC/DC – Alternating Current/Direct Current

I/O – Input/Output.

Record – AVL data stored in FMB640 memory. AVL data contains GPS and I/O information

AVL packet - Data packet which is sent to server during data transmission. AVL packet can contain 1 to 50 records.

Geofence – a virtual geographic area of interest that can be defined by a radius or polygon for the location. In this document term “Geofence” is often used as functionality, which generates an event when crossing a defined area.

2 BASIC DESCRIPTION

FMB640 is a professional tracker with GPS and GSM connectivity, which is able to determine the object's coordinates and transfer them via the GSM network. This device is perfectly suitable for applications, which need location acquirement of remote objects. It is important to mention that FMB640 has additional inputs and outputs, which let you control and monitor other devices on remote objects. FMB640 also has a USB port for device status log output and for saving configurations.

2.1 Package contents[1]

Usually the FMB640 device sample is supplied to the customer in a cardboard box containing all the equipment that is necessary for operation. The package contains:

FMB640 device
Input and output power supply cable with 2x10 connection pins
4 screws for assembling device
GPS/GLONASS antenna
GSM antenna
USB cable
Port 1/2 cable
Port 3 cable

2.2 Basic characteristics

GSM / GPRS features :

- Quad-band 900/1800 MHz; 850/1900 MHz
- GPRS Multi-Slot Class 12(up to 240 kbps)
- GPRS Mobile Station Class B
- SMS (text/data)

Blue-tooth:

- Blue-tooth specification V4.0
- Blue-tooth transceiver fully compliant with Blue-tooth specification V4.0 for external peripherals:
  - Voice calls over Blue-tooth
  - Configuration via Blue-tooth
  - OBDII Blue-tooth dongle

GNSS features:

- Tracking: 33/ 99 acquisition channels
- -165 dBM sensitivity
- Hot start <1s
- Warm Start < 25s
- Cold start < 35s
- NMEA-183 protocol

[1] Package content depends on Order Code, and can be customized by customer needs.

- GPS, GLONASS, GALILEO, BEIDOU, SBAS, QZSS, DGPS, AGPS
- Accuracy < 3m

Hardware features:

- STM32 processor;
- 16 MBit internal Flash memory;
- External memory card slot;
- Built-in accelerometer;
- Built-in Blue-tooth 4.0;
- Internal backup battery included;

Interface features:

- Power supply: 10 ÷ 30V;
- USB port;
- 4 digital inputs;
- 4 analog inputs (AIN4 is shared with DOUT4 and must be configured to work);
- 4 open collector digital outputs;
- 4 1Wire® temperature sensor;
- 1Wire® iButton;
- LEDs indicating device status;
- K-Line interface for online Tachograph Vehicle Data transfer;
- 2xRS232 port;
- RS485 port;
- J1708 interface;
- LVCAN interface;
- CAN messages 2.0 A, B Active support. Speed up to 1 Mbit/s;
- Roaming enabling/disabling;
- Offline working mode;
- Records importing using USB/microSD card;
- Remote logs reading via SMS/GPRS;

Overvoltage protection:

Table 1 Overvoltage Protecton:

Description	Voltage	Duration
Normal operation	10-30V	Unlimited
Protection turns on, device turns off.	34V	Unlimited
Maximum voltage	<70V	Unlimited
Maximum voltage impulse	90V	5 miliseconds

2.3 Mechanical features

Table 2 FMB640 physical interfaces and operation environment

Part name	Physical specification	Operation environment
Navigation LED	LED	Power supply 10...30 V DC

Part name	Physical specification	Operation environment
Modem LED	LED	2 W Max Operation temperature: -25°C … +55°C Storage temperature: -40°C … +70°C Energy consumption[1]: GPRS: ⎓ 120 mA r.m.s Max., Nominal: ⎓ average 65 mA r.m.s, GPS Sleep: ⎓ average 28 mA, Deep Sleep: ⎓ average less than 7 mA[2] Storage relative humidity 5 … 95 % (non condensating) Battery charge current: ⎓ average 55 mA, Rated current: ⎓ 250 mA, Internal fuse: 3A, 125V
GPS	GPS antenna connector SMA jack(female outer shell, female inner pin)	
GSM	GSM antenna connector RP-SMA jack(female outer shell, male inner pin)	
Socket 2x10	Tyco Micro MATE-N-LOK™ or similar	
USB	Mini USB socket	
Port1	RS232 or RS485 port channel 1 (RJ45 socket)	
Port2	RS232 port channel 1 (RJ45 socket)	
J1708	J1708 port channel	

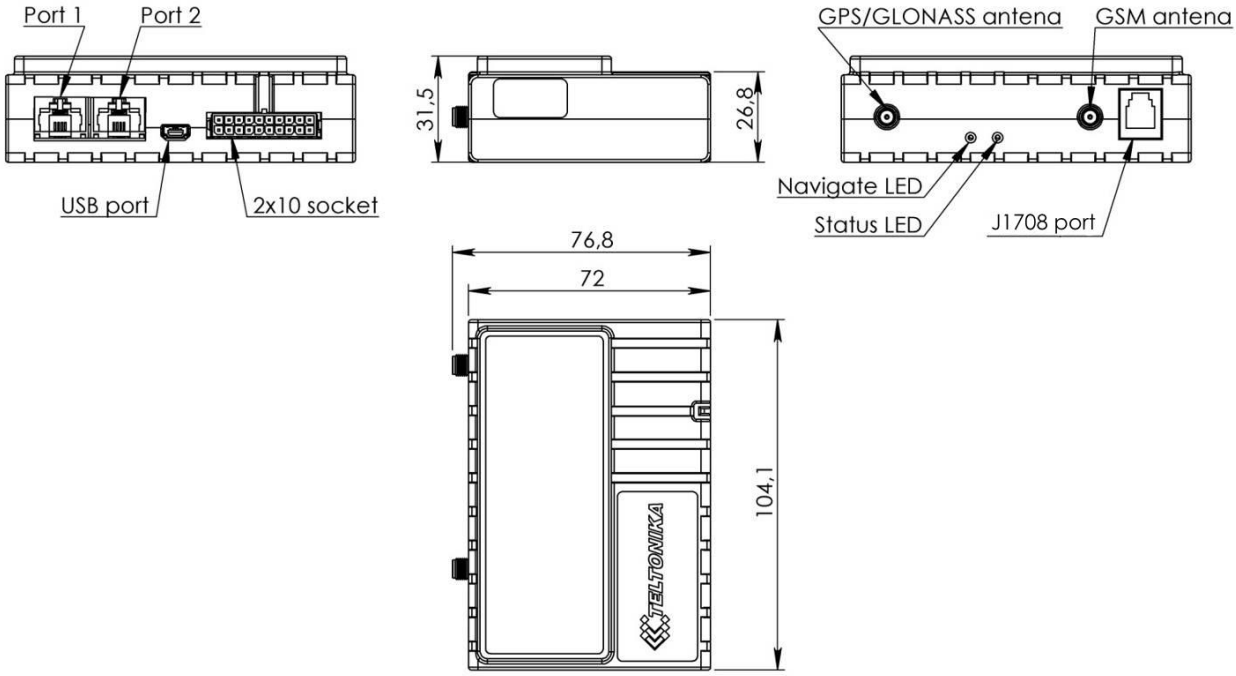

Figure 1 FMB640 view & dimensions in mm (tolerance ±2mm)

2.4 Technical Information about internal battery!

Ni-MH Rechargeable battery, 8.4V, 550 mA.

[1] Energy consumption has been tested at 12V voltage with no battery charging.
[2]When in Deep Sleep mode no data storing and sending is activated.

FMB640 operating time with internal backup battery depends on temperature, data sending frequency (SMS and GPRS), and accumulator age, number of charge/discharge cycles.

For example:

- In sleep mode a new FMB640 device, operating time approximately 5 hours
- In deep sleep mode – 35 hours
- Operating time for a new FMB640 device, working in normal mode (records are being acquired every 10 sec. and sent in packets of 4 records every 60 sec.), is approximately 2 h 10 min.
- Charging temperature: 0 – 40 °C

CAUTION: RISK OF EXPLOSION IF BATTERY IS REPLACED BY AN INCORRECT TYPE. DISPOSE OF USED BATTERIES ACCORDING TO THE INSTRUCTIONS.

2.4.1 Battery Disposal instructions:

Battery should not be disposed of with general household waste.
Bring damaged or worn-out batteries to your local recycling center or dispose them to battery recycle bin found in stores.

2.5 Electrical characteristics

Table 3 Electrical characteristics

VALUE / CHARACTERISTIC DESCRIPTION	Min.	Typ.	Max.	Unit
SUPPLY VOLTAGE				
Supply Voltage (Recommended Operating Conditions)	10	-	30	V
Supply Voltage (for internal rechargeable battery charging proper functioning)	10	-	30	V
POWER SUPPLY CURRENT (HARDWARE VERSION WITH INTERNAL BATTERY)				
Deep Sleep, average, Icc.ds	-	5.4	8	mA
Sleep, average, Icc.ds, Vcc=12V	-	40	-	mA
Sleep, average, Icc.ds, Vcc=24V	-	20	-	mA
Ucc=12.6V, all modules fully working, internal battery is charging, Icc1	-	-	350	mA
Ucc=12.6V, all modules fully working, internal battery is charged, Icc2	-	-	300	mA
Ucc=25.2V, all modules fully working, internal battery is charging, Icc3	-	-	195	mA
Ucc=25.2V, all modules fully working, internal battery is charged, Icc4	-	-	140	mA

CHARACTERISTIC DESCRIPTION \ VALUE	Min.	Typ.	Max.	Unit
DIGITAL OUTPUT (OPEN DRAIN GRADE)				
Drain current (Digital Output OFF)	-	-	120	uA
Drain current (Digital Output ON, Recommended Operating Conditions)	-	-	300	mA
Static Drain-Source resistance (Digital Output ON)	-	-	300	mOhm
DIGITAL INPUTS				
Input resistance (DIN1, DIN2, DIN3)	15	-	-	kOhm
Input Voltage (Recommended Operating Conditions)	0	-	Supply voltage	V
Input Voltage threshold (DIN1)	-	7,5	-	V
Input Voltage threshold (DIN2, DIN3, DIN4)	-	2,5	-	V
ANALOG INPUTS				
Input Voltage (Recommended Operating Conditions), Range1	0	-	10	V
Input resistance, Range1	-	120	-	kOhm
Input Voltage (Recommended Operating Conditions) Range2	0	-	30	V
Input resistance, Range2	-	147	-	kOhm
OUTPUT SUPPLY VOLTAGE 1-WIRE[3]				
Supply Voltage	3,3	-	3,9	V
Output inner resistance	-	7	-	Ohm
Output current (U_{out} > 3.0V)	-	30	-	mA
Short circuit current (U_{out} = 0)	-	130	-	mA
CAN INTERFACE				
Internal terminal resistors CAN bus	-	120	-	Ohm
Differential input resistance	19	30	52	kOhm
Recessive output voltage	2	2.5	3	V
Differential receiver threshold Voltage	0.5	0.7	0.9	V
Common mode input voltage	-30	-	30	V

When connecting a COM port to an active external device keep in mind that the first power supply must be connected to FMB640, and then the external device should be powered. Connecting external devices when FMB640 is powered off is not recommended.

[3]- 1-wire Supply voltage PIN is dedicated for 1-wire devices ONLY, do not use it for any other purpose.

2.6 Absolute Maximum Ratings

Table 4 Absolute maximum ratings

CHARACTERISTIC DESCRIPTION / VALUE	Min.	Typ.	Max.	Unit
Supply Voltage (Absolute Maximum Ratings)	-32		32	V
Digital output clamp threshold voltage (Absolute Maximum Ratings), (I_{drain} = 2mA)	36			V
Digital Input Voltage (Absolute Maximum Ratings)	-32		32	V
Analog Input Voltage (Absolute Maximum Ratings)	-32		32	V
Voltage on Supply Voltage 1-Wire (Absolute Maximum Ratings)	0		10	V
Voltage on Data Input/Output 1-Wire (Absolute Maximum Ratings)	0		10	V
Voltage on CANH, CANL (Absolute Maximum Ratings)	-58		58	V

3 CONNECTION AND PINOUT

3.1 SIM card insert scheme

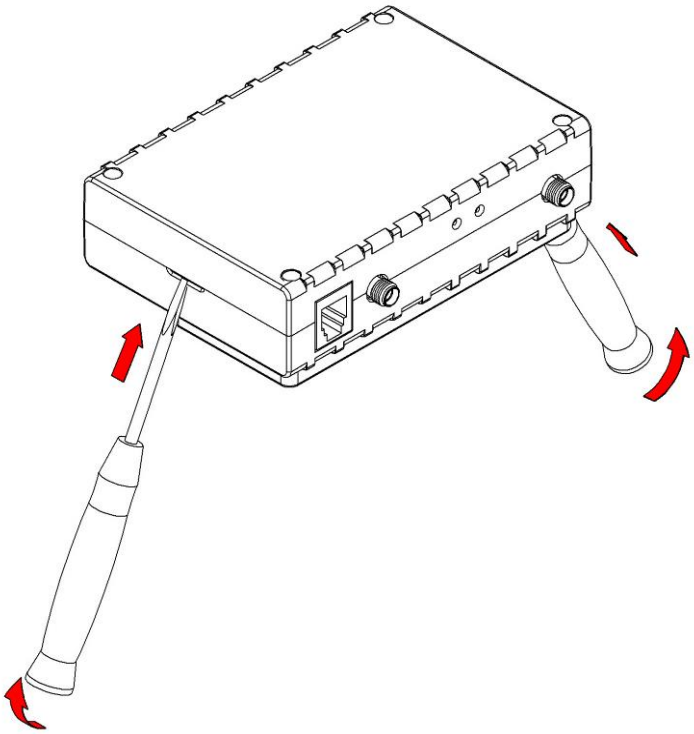

Gently open FMB640 case using screwdrivers

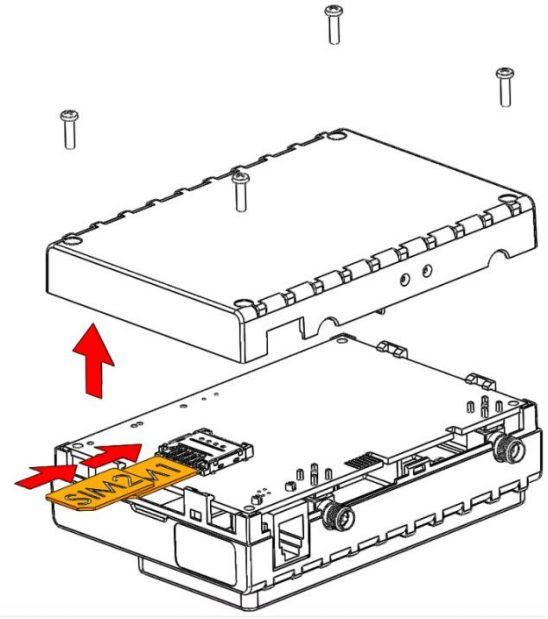

Take off FMB640 case and insert SIM cards as shown. SIM1 SLOT (default, recommended for 1 SIM mode) is closer to PCB, SIM2 SLOT is the upper one

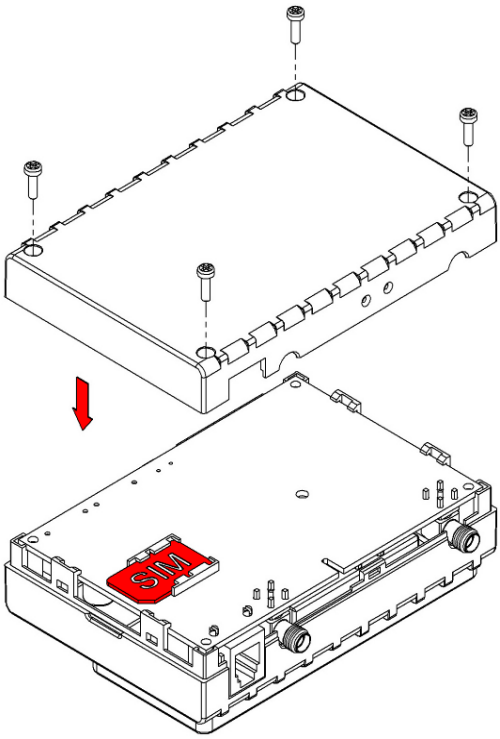

Assemble device as shown and put screws into the holes

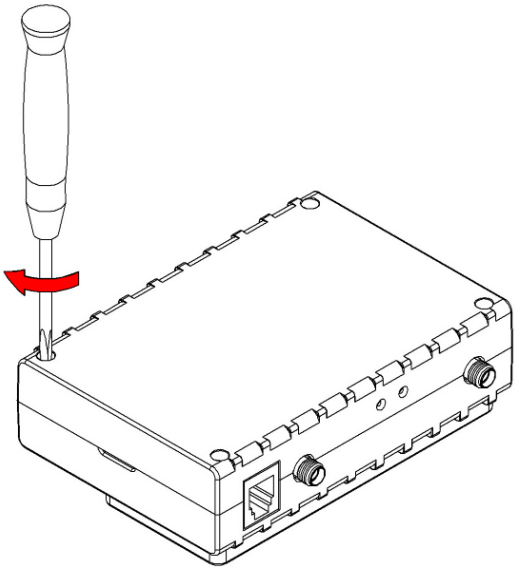

Screw all 4 screws

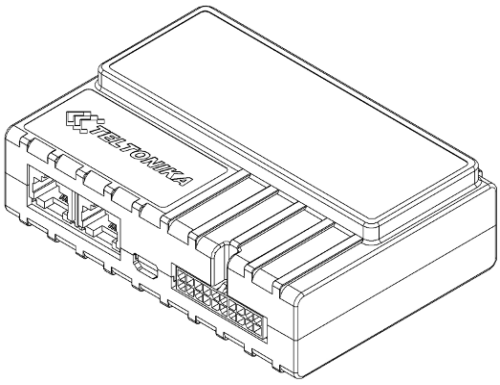

Device is ready

3.2 Installing FMB640 drivers

Software requirements

• Operating system 32-bit and 64-bit: XP with SP3 or later, Windows Vista, Windows 7, 8, Windows 8.1 and 10.

• MS .NET Framework V3.5 or later (Microsoft)

Drivers

Please download Virtual COM Port drivers from Teltonika website: FMB640 VCP Driver

Installing drivers

Extract and run VCPDriver_V1.3.1_Setup.exe. This driver is used to detect FMB640 device connected to the computer. Click 'Next' in driver installation window (figures below):

Figure 2 Driver installation window

This will launch the device driver installation wizard. In the following window click 'Next' button again:

Figure 3 Driver installation window

Setup will continue installing drivers and will display a window about successful process in the end. Click 'Finish' to complete setup:

Figure 4 Driver installation window

You have now installed drivers for FMB640 device successfully.

3.3 Navigate LED

Table 5 Navigate LED operation

Behaviour	Meaning
Permanently switched on	GPS signal is not received
Blinking every second	Normal mode, GPS is working
Off	GPS is turned off because: • Deep sleep mode Or • GPS antenna short circuited

3.4 Status LED

Table 6 Status LED Operation

Behaviour	Meaning
Blinking every second	Normal mode
Blinking every 2 seconds	Deep sleep mode
Blinking fast for a short time	Modem activity
Blinking fast constantly	Boot mode
Off	• Device is not working Or • Device firmware being flashed

3.5 Socket 2?10 pinout

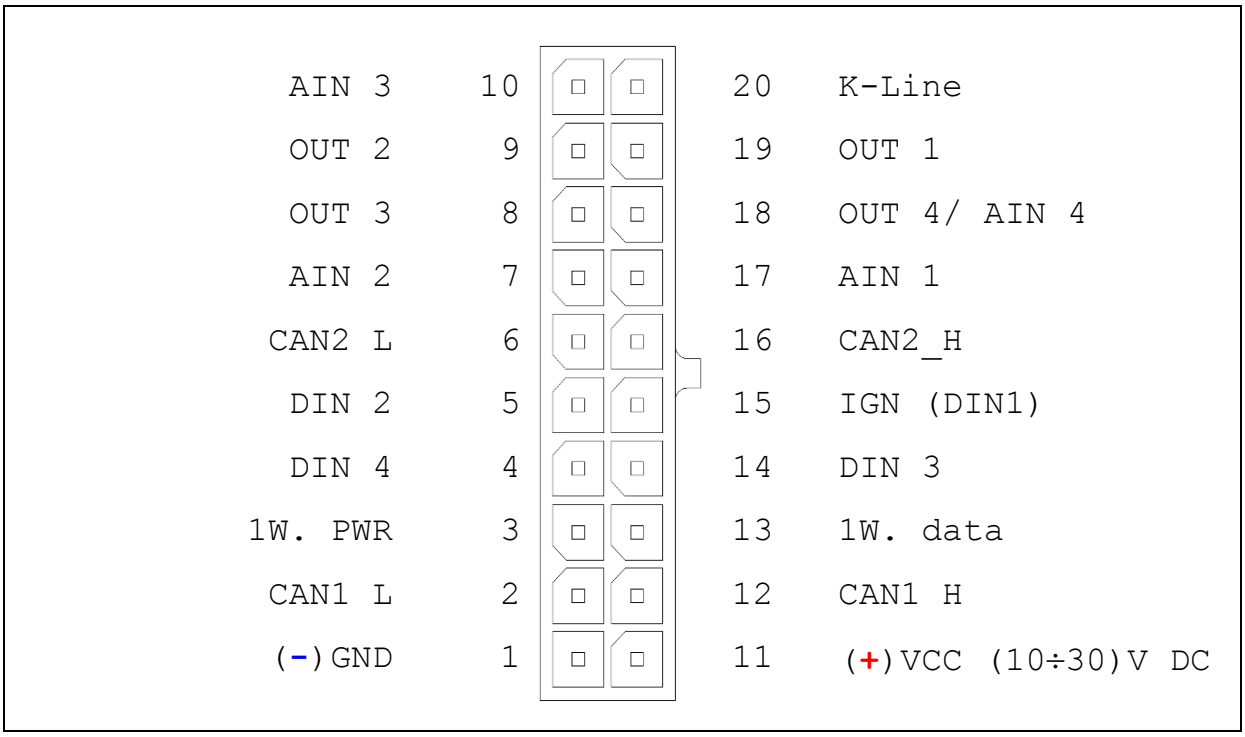

Figure 5 2x10 socket pinout

Table 7 2x10 SOCKET PINOUT DESCRIPTION

Pin No.	Pin Name	Description
1	(-)GND	(-) Ground pin. (10…30) V DC*
2	CAN1 L	SAE J1939 CAN interface Low channel 1
3	1W. PWR	Power supply pin for Dallas 1-Wire® devices
4	DIN 4	Digital input. Channel 4
5	DIN 2	Digital input. Channel 2
6	CAN2 L	SAE J1939 CAN interface Low channel 2
7	AIN 2	Analog input, channel 2. Input range: 0 - 30V/ 0 - 10V DC
8	OUT 3	Digital output. Channel 3. Open collector output
9	OUT 2	Digital output. Channel 2. Open collector output
10	AIN 3	Analog input, channel 3. Input range: 0 - 30V/ 0 - 10V DC
11	(+)VCC (10...30) V DC	Power supply pin
12	CAN1 H	SAE J1939 CAN interface High channel 1
13	1W. data	Data channel for Dallas 1-Wire® devices
14	DIN 3	Digital input, channel 3
15	DIN 1	Digital input, channel 1 (RESERVED FOR IGNITION LINE)
16	CAN2 H	SAE J1939 CAN interface High channel 2
17	AIN 1	Analog input, channel 1. Input range: 0 - 30V/ 0 - 10V DC
18	OUT 4/ AIN 4	Digital output. Channel 4. Open collector output OR Analog input, channel 4. Input range: 0 - 30V/ 0 - 10V DC
19	OUT 1	Digital output. Channel 1. Open collector output
20	K-LINE	K-LINE interface for online Tachograph Vehicle Data transfer

3.6 USB

When FMB640 is connected to a PC it creates a STM Virtual COM Port, which can be used as a system port (to flash firmware and configure the device).

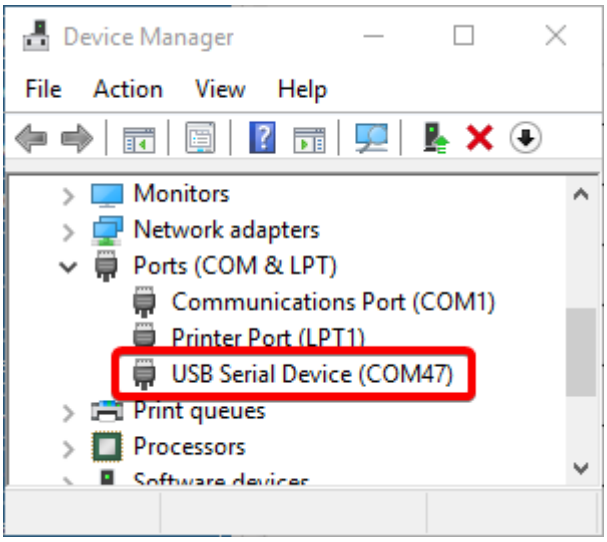

Figure 6 COM-Ports

3.7 Accessories

Note: Teltonika does not provide any additional equipment like panic buttons, door sensors etc, except 1 – wire devices: TTJ-101 thermo sensor, I-Button, 1-wire RFID. These devices are not included in FMB640 package and can be offered by special order only.

1 – Wire devices

One of the FMB640 features is realized 1-Wire data protocol, which enables connection of up to three different type thermometers (DS1820, DS18S20 and DS18B20) and I-Button DS1990A. Figure 7 and Figure 9 shows FMB640 and 1-wire devices connection schemes.

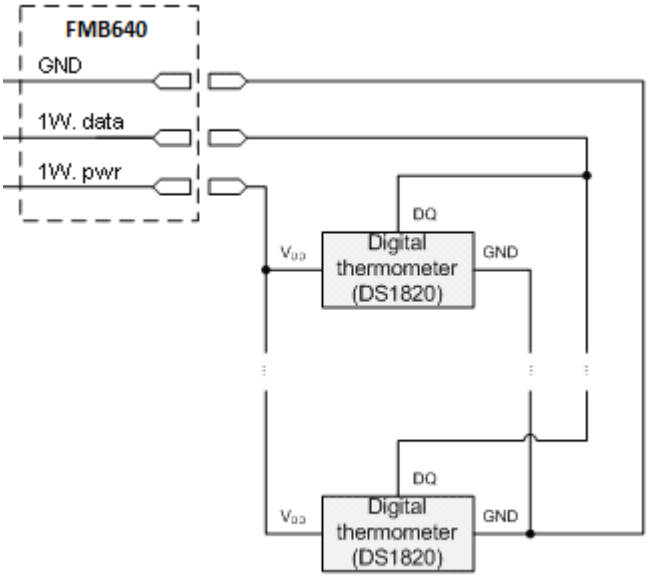

Figure 7 Temperature sensors connection scheme

Left row of pins			Right row of pins	
1W. PWR (FMB640 – pin3)	1	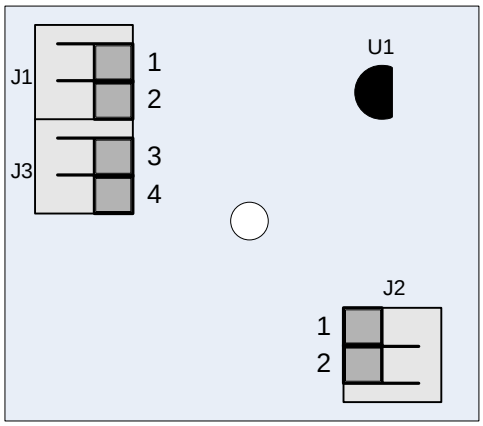	1	Vpp(+5 Volts DC) – power source for external digital sensor
1W. Data (FMB640 – pin13)	2		2	Output from external digital sensor
GND (FMB640 – pin1)	3			
Digital Input	4			

Figure 8 Digital thermometer DS1820 and TTJ 100 connection scheme

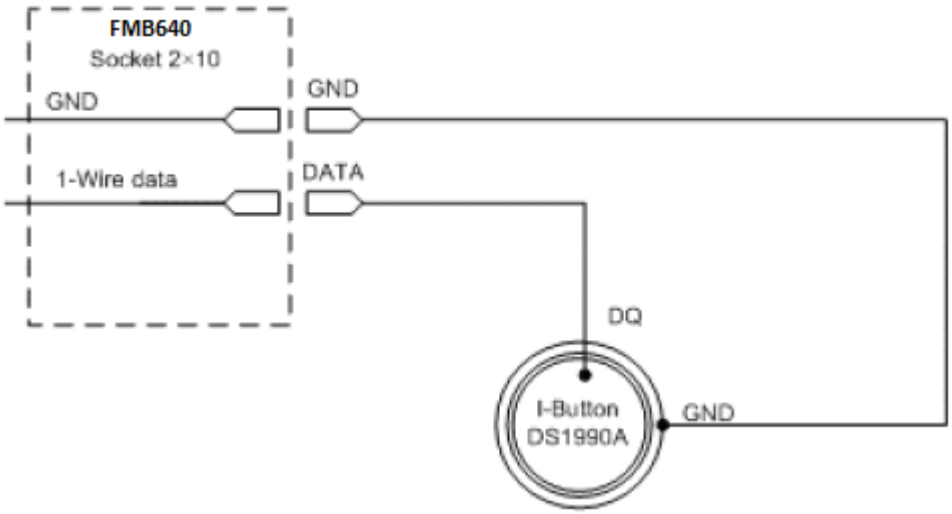

Figure 9 Digital key "I-Button" DS1990A connection scheme

Fuel tank sensors

A fuel tank level sensor exists in most of the cars, which shows the approximate fuel level in the driver's indicator panel. It is possible to connect FMB640 Analog input (if sensor returns analogue signal proportional to fuel level). Figure 10 describes the connection scheme to the FMB640 and fuel tank sensor. After the connection to the tank fuel level sensor, calibration is needed. Calibrations needed due of the fact that most fuel tank sensors are not linear. Calibration is being performing by measuring voltage dependence on volume of fuel in tank.

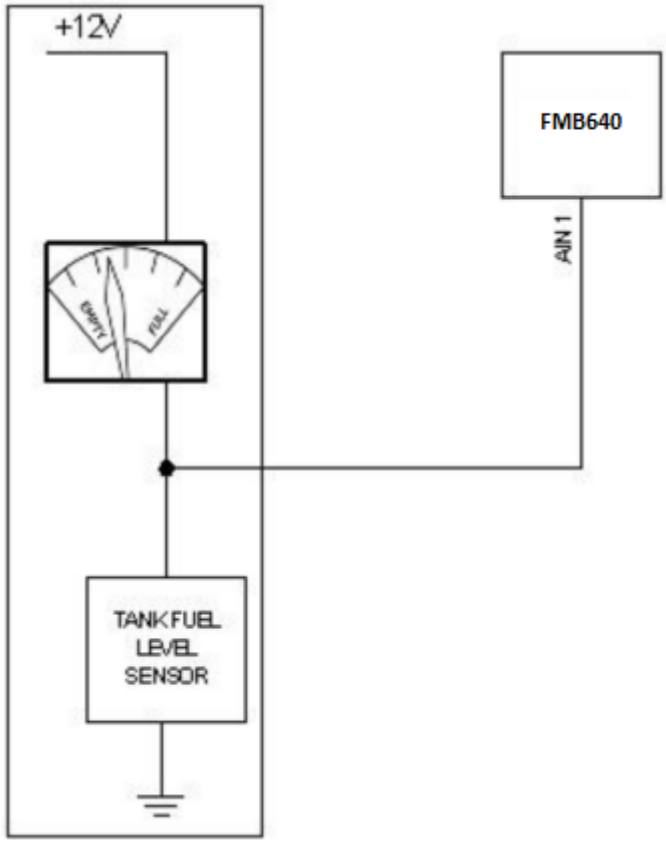

Figure 10 Fuel tank sensor

Impulse counters

Figure 11 describes the connection scheme to the FMB640. Here two pulse meters are used, where one is mounted on the direct flow valve and the other on the return flow valve. Data from both meters is sent to the FMB640. Then FMB640 calculates DIN3-DIN4. Resulting difference equals to fuel consumption. Filter should be used on the direct flow pipe to prevent any damage caused by impurities in the liquid. The filter mounted in the meter inlet is only a safety filter and it is too small to act as a strainer.

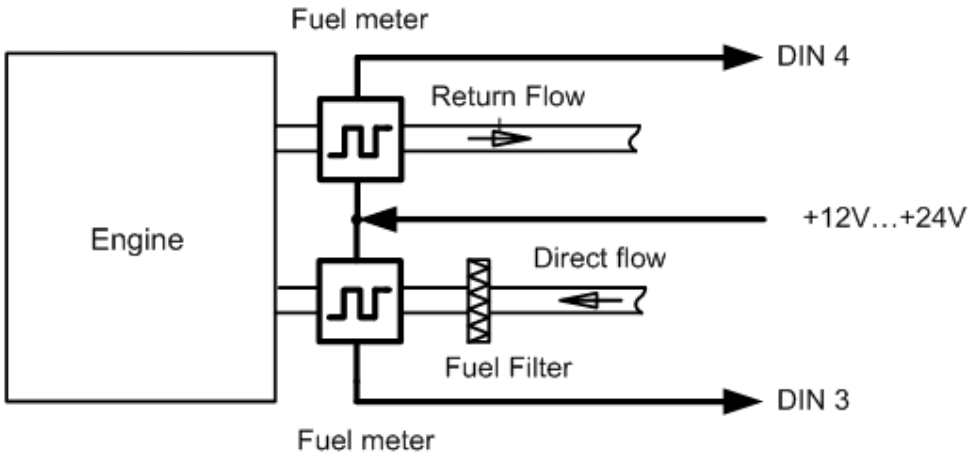

Figure 11 Pulse fuel meters connection scheme

Alarm buttons, door sensors, etc

Alarm buttons, door sensors, ignition, etc return two states: high or low voltage. Digital inputs should be used to read this information. Figure 12 below shows how to connect alarm button, door sensor, etc.

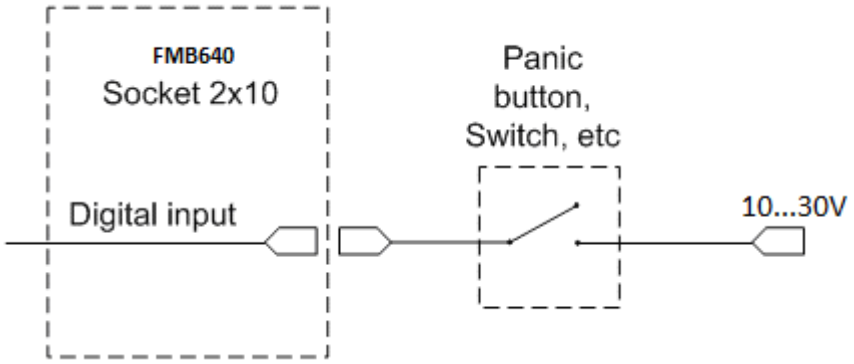

Figure 12 Panic button connection

In cases when sensor output signal is negative an additional relay has to be installed to convert negative signal to positive.

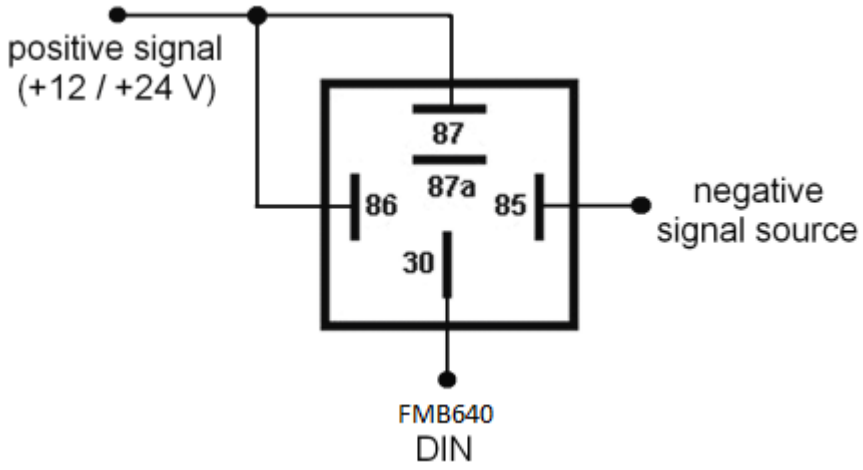

Figure 13 Inverting relay connection

Immobilizer relay

When connected a shown below, FMB640 disables engine starter when output is ON. More details about relays can be found below.

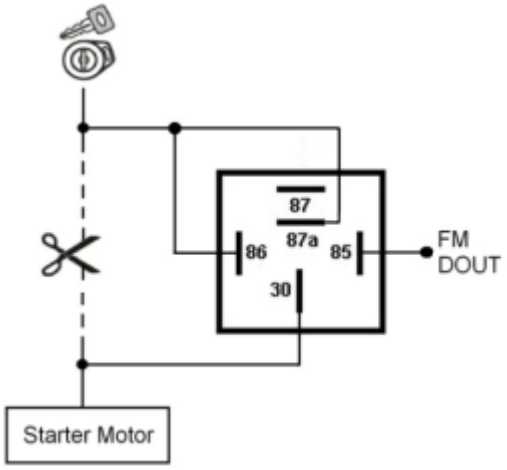

Figure 14 Immobilizer relay connection

Relays

A simple automotive relays is used to invert input signal or to immobilize engine starter. Note, that they are available as 12 or 24 Volt.

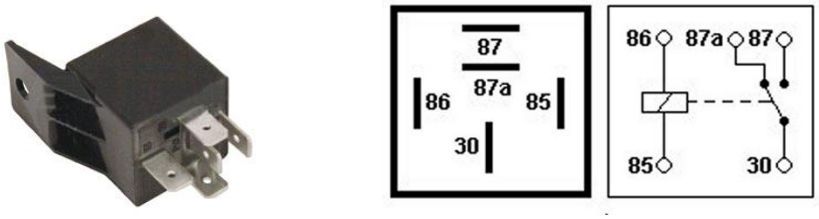

Figure 15 Relay pinout

LV-CAN200

Light vehicle CAN adapter, which allows reading CAN data from light vehicles. LV-CAN200 supports more than 1200 models of vehicles.

Readable data:

- Vehicle Driven Distance
- Total fuel consumption
- Fuel level (Dashboard)
- Engine speed (RPM)
- Vehicle speed (wheel)
- Acceleration position

Figure 16 LV-CAN200 adapter

Technical details:

- Power supply (+9… +50)V DC
- Power supply current:
  - Active mode max 50mA
  - Standby mode max 2mA
- Working temperature -40..85 ºC
- Max working humidity 85 % (non condensate)

Information about LV-CAN200 installation schemes will be provided individualy by sales representative.

ALL-CAN300

ALL-CAN300 is designed to acquire CAN data from any kind of transport (light vehicles, trucks, buses, agriculture transport, special transport). ALL-CAN300 supports more than 1800 models of vehicles.

Figure 17 ALL-CAN300 adapter

Supported OnBoard computer data:

- Ignition indication
- Vehicle mileage
- Vehicle speed
- Total fuel consumption
- Fuel level (Dashboard)
- Acceleration position
- Engine temperature
- Engine working
- Engine lifetime
- Alarm
- Driver's seat belt
- Passenger's seat belt

Technical data:

- Power supply (+9… +50)V DC
- Power supply current:
  - Active mode max 50mA
  - Standby mode max 2mA
- Working temperature -40..85 ºC
- Max working humidity 85 % (non condensate)

4 FIRMWARE

4.1 Updating firmware using USB cable

FMB640 functionality is always improving, new firmware versions are developed. Current module firmware version can be retrieved from configurator. See configuration description for details. Contact sales manager to get the latest firmware.

Connect FMB640 to PC with the USB cable. Launch “Firmware Updater”, select COM port to which device is connected, click connect, and when IMEI and Firmware version fields are filled, start the update. Device needs some time to send IMEI and Firmware version, so do not be afraid if IMEI will not show up immediately, disconnect and after 1-2 minutes try to connect again. When starting update device will open link with updater. With link open device downloads firmware and starts installing. Wait until updater becomes green and it gives message that firmware is done. Update process may take up to several minutes.

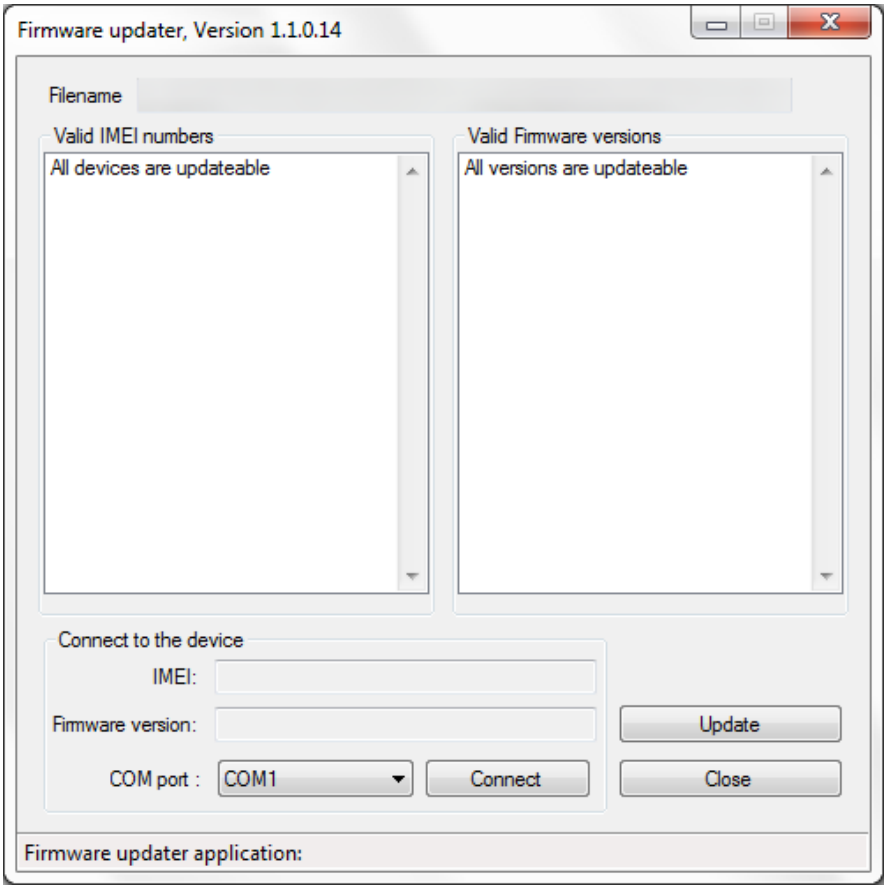

Figure 18 FM updater screen

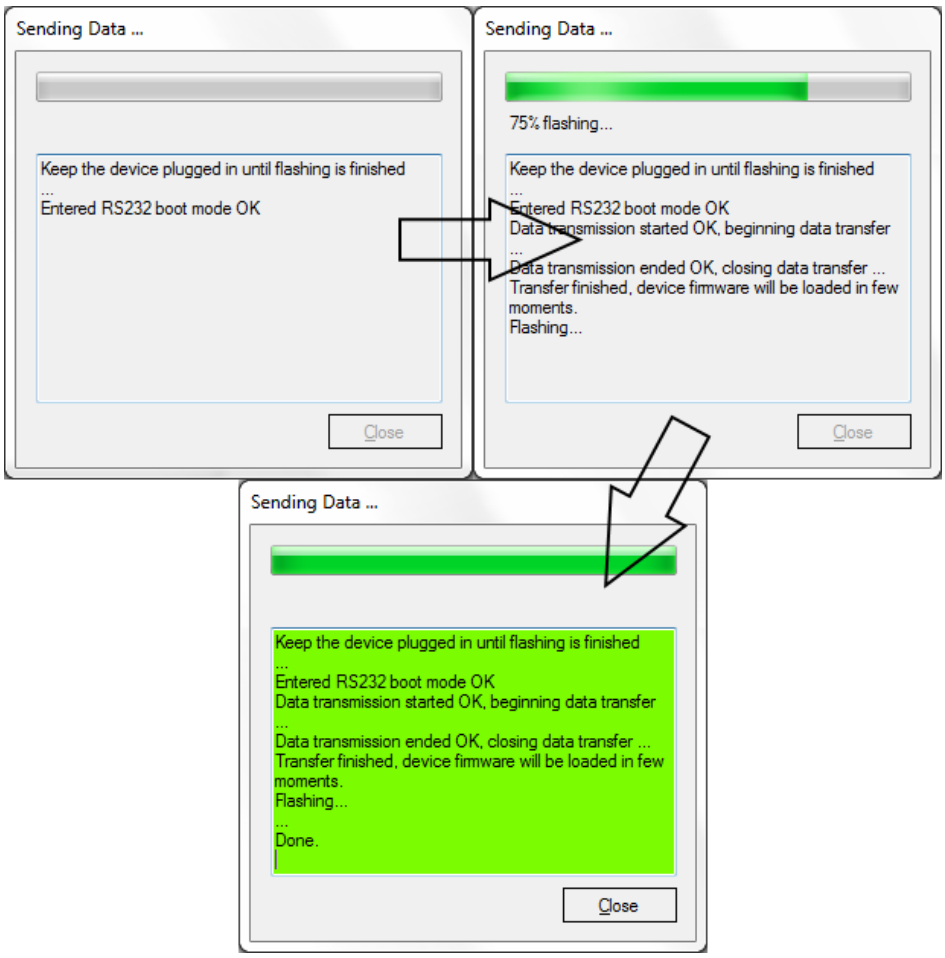

Figure 19 FM firmware updating finished

You may now close the update window and start using your FMB640 device.

5 OPERATIONAL BASICS

5.1 Operational principles

FMB640 module is designed to acquire records and send them to server. Records contain GPS and I/O information. Module uses GPS receiver to acquire GPS data and is powered with 3 data acquire methods: time-based, distance-based, angle-based and speed-based. Method's details are described in Data Acquisition chapter. All data is stored in flash memory and later can be sent via GPRS or SMS channels. GPRS mode is the most preferred data sending mode. SMS mode is mostly used in areas without GPRS coverage or when GPRS usage is too expensive.

FMB640 communicates with server using special data protocol. Data protocol is described in device protocols documentation. Please contact Teltonika sale manager to find out more about protocols documentation purchase.

FMB640 can be managed by SMS commands (SMS Command list is described in SMS Command List section) and GPRS commands (GPRS Command list is described in GPRS Command List section). Module configuration can be performed over TCP or via SMS. Configuration parameters and modes are described in device protocols documentation.

5.2 Operational Modes

FMB640 is designed to operate in four different modes: Normal Mode, GNSS Sleep, Deep Sleep and Online Deep Sleep modes.

Normal Mode means that FMB640 is fully functional and performs all the functionality mentioned above in Operational principals section.

Sleep Modes are designed to dramatically reduce power consumption. Those are separate modes and certain conditions must be fulfilled to switch from Normal operation and enter those modes. .

5.3 Accelerometer

FMB640 has a built in 3 axis accelerometer which allows the device to indicate if vehicle is moving or not, as well as measure acceleration. To indicate that a vehicle is moving, FMB640 constantly (in frequency of 50 Hz) checks for g force change on X, Y and Z axes. If measured g force keeps exceeding the set limit (it is not configurable) for defined time interval in "Movement Start Delay" field (Figure 20), then the vehicle is considered as moving. Same settings for idle indication apply – if g force change is less than the set limit for time interval defined in "Movement Stop Delay" field then the vehicle is considered as idle (not moving).

Example for default parameters: Movement Start Delay (s) = 1 and Movement Stop Delay (s) = 60 means that movement will be detected after 1 second and stop will be detected after 60 seconds of inactivity.

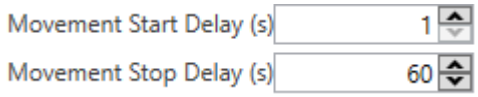

Figure 20 Accelerometer settings

5.4 Virtual Odometer

Virtual odometer is used to calculate travelled distance in FMB640 as a separate I/O element. When FMB640 detects movement, it starts counting distance using GPS signal: every second it checks current location and calculates distance between current and previous point. It keeps adding these intervals until it is time to make a record, then FMB640 records its location and adds odometer value, which is equal to the sum of all distances, measured every second. When record is made, odometer resets to zero and distance calculation starts all over again.

6 CONFIGURATOR & FEATURES

6.1 STARTUP

FMB640 configuration is performed via FMB640 Configurator program. FMB640 Configurator can be downloaded from FMB640 Downloads. Contact sales manager to get the latest FMB640 Configurator version. FMB640 configurator operates on Microsoft Windows OS and uses MS .Net Framework 3.5 or higher. Please ensure that MS .Net Framework 3.5 or later is installed on your PC before starting configurator. Latest MS .Net Framework version can be downloaded from official Microsoft web page.

Module configuration is performed over USB cable or COM connection. Configuration process starts from starting FMB640 Configurator program and then connecting to FMB640 device by selecting button with device picture and it's details. If one of the communication sources (USB cable or COM) is connected to the device, the configurator will detect it

automatically and that button will appear at home screen with IMEI, current firmware version and Configuration version (Figure 21).

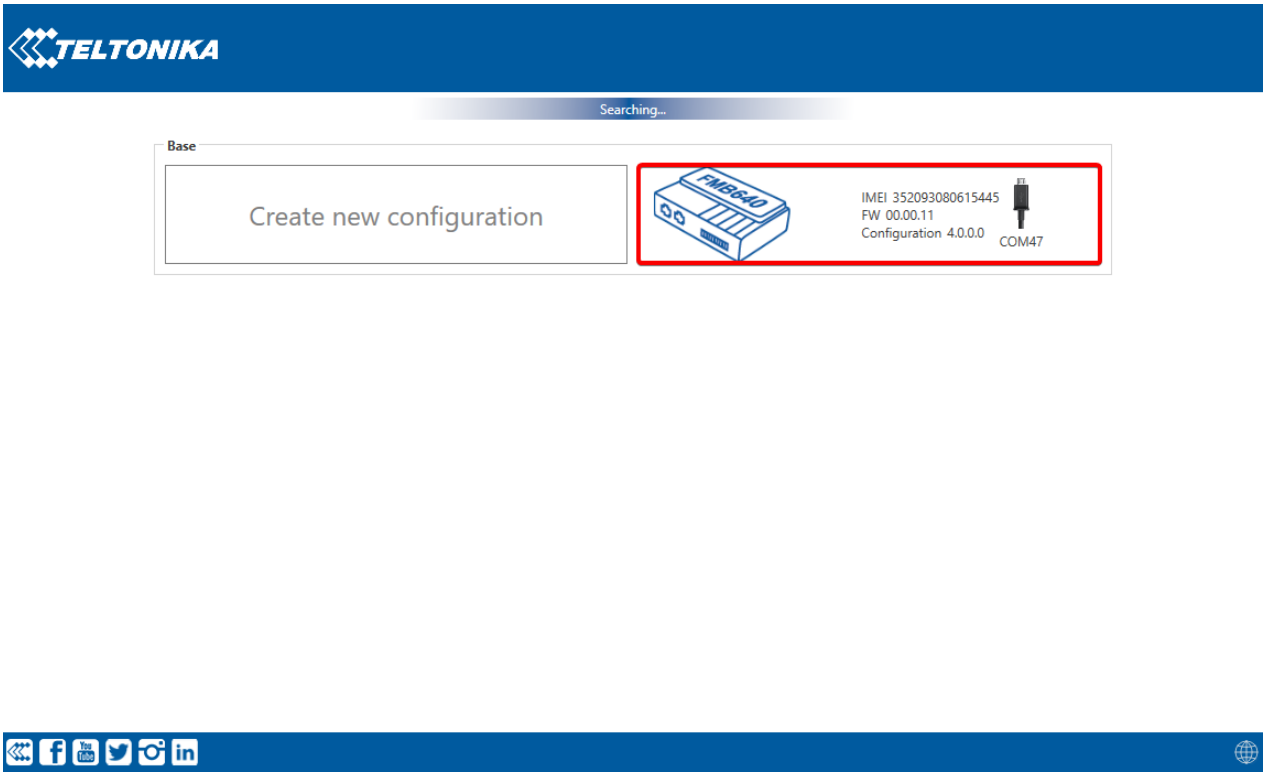

Figure 21 FMB640 Configurator window

6.2 Configurator structure

FMB640 user can revert to default settings, by pressing Load Defaults button. Any modification of configuration settings has to be saved to FMB640 device; otherwise it will not be written to device flash memory.

FMB640 Configurator is divided into 4 main areas (Figure 22):

1. Header buttons area;
2. Sidebar buttons area;
3. Configurable parameters and values menu
4. Footer

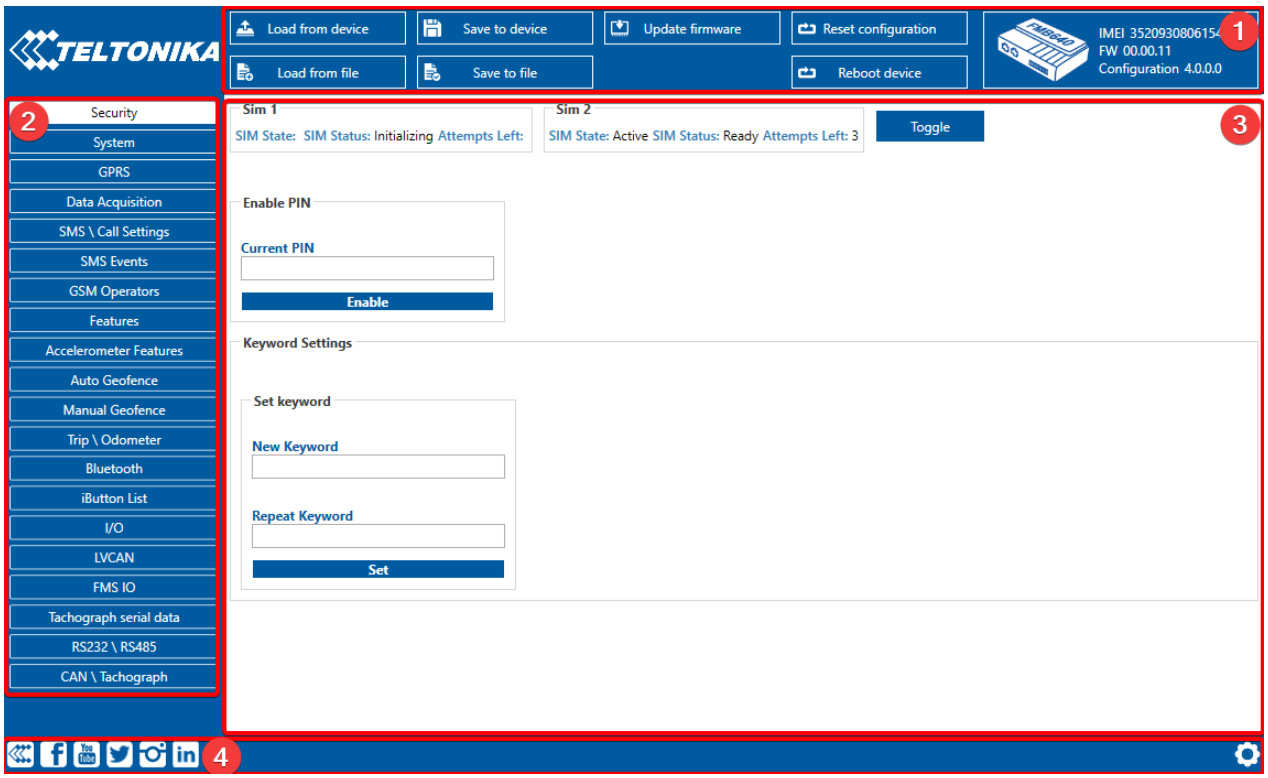

Figure 22 FMB640 Configurator window structure

6.3 Header buttons area

Table 8 Configurator buttons area description

Main Buttons	
Button	**Description**
Device info	Disconnects device from Configurator
Load from device	reads configuration parameters from FMB640 Flash memory
Save to device	saves configuration parameters to FMB640 Flash memory
Reset configuration	loads default FMB640 settings that later can be modified
Save to File	allows user to save currently entered settings to .XML or .Bin file for later usage or update over FOTA.
Load from File	allows user to load configuration saved in .XML or .Bin extension file
Reboot device	reboots FMB640

6.4 Parameters Configuration

This chapter is dedicated to provide detailed description for each Configurator sector.

6.4.1 Sidebar buttons area

FMB640 sidebar area is filled with various links to configurable parameters.
Buttons list:

- Security;
- System;
- GPRS;

- Data Acquisition
- SMS \ Call Settings;
- SMS Events;
- GSM Operators;
- Features;
- Accelerometer Features;
- Auto Geofence;
- Manual Geofence;
- Trip \ Odometer;
- Blue-tooth;
- iButton List;
- I/O;
- LVCAN;
- FMS IO;
- Tachograph serial data;
- RS232 \ RS485;
- CAN \ Tachograph.

6.4.2 Status info

Status info monitoring FMB640 real time information in 5 different positions: Device info, GNSS info, GSM info, CAN info and I/O info. All this information can be saved into .HTML format with a button which is in device info table top right corner.

In device info user can see device name, firmware version, last device start time, RTC Time, power voltage (mV), device IMEI, SD card free space, Device uptime, Battery voltage (mV) and internal battery status.

In GNSS info user can see:

▪ Real time GNSS status information: module status (ON, Deep/GPS/Online sleep mode), how much GNSS packets device got from start-up, what is fix status and what was last GNSS fix time.

▪ Satellites information: how many and what type of satellites are visible. How many satellites are used for location positioning.

▪ Location information: latitude, longitude, altitude, angle, HDOP, PDOP and speed.

In GSM Info user can see:

▪ GSM status: modem status, SIM status, GPRS status, actual operator code and GSM signal level.

▪ GPRS traffic: how much data has been send from device and received from device.

▪ Sockets information: what server domain and port is used.

▪ Records: how much records were sended to server from last data reset, when last record send to server was and when was last server response.

▪ SMS count: how much FMB640 received SMS and how much SMS was send from device.

In I/O info user can see all I/O element values from all configurable I/O elements.

6.4.3 Security info

In security section user can see SIM card and Configurator keyword security information.

▪ User can see SIM1 and SIM2 state and current status of active SIM card. If used SIM card with PIN code user can enter it here. How many attempts left to enter pin code is shown too.

▪ When SIM PIN code is entered correctly user can change or disable PIN code from SIM card. When SIM PIN is disabled and user want to enable it again user must enter last used PIN code.

▪ If device has two inserted SIM cards, user can change PIN code of both of them.

▪ For configuration security keyword can be set in Configurator. Keyword can be saved in configuration file (.cfg), so there is no need to connect the device to the configurator to configure keyword. Min. keyword length is 4 symbols and max. length is 10 symbols. Only uppercase, lowercase letters and numbers are supported. Keyword can be configured to .cfg configuration file when device is not connected to device.

6.4.4 System settings

System settings have 14 configurable parameters:

- Sleep settings, where user can choose sleep mode;
- GNSS Source, where user can pick any or all satellite systems to use. More selections might improve tracking quality
- Analog Input value range, where user can choose analog input range 10 V or 30 V (10 V range for now works same as 30 V range).
- AIN4/DOUT4 Mode, user can select on of 2 options to define which way 18th pin (from Figure 5) will work.
- J1708 settings used to enable/disable following vehicle bus standard used for communication.
- Odometer Source settings, where user can select one of the options for odometer counting. There are 5 possible options: GNSS, LVCAN, ALLCAN, FMS and KLINE.
- Speed source settings are used to declare what technology will be used for vehicle speed measurement
- Records Settings, where user can enable or disable records when GPS is not available (no time synchronization). There are additional parameters for records saving: memory selection and sorting option to define where records will be saved and in what order they will be sent.
- Open Link Timeout is used to set timeout of link between FMB640 and AVL application termination. If FMB640 has already sent all records it waits for new records before closing link (except Deep Sleep mode, more information in Deep Sleep mode chapter). If new records are generated in the period of this timeout, and minimum count of timer to send is reached, they are sent to AVL application. This option is useful when GSM operator charge money for link activation.
- Server Response Timeout is used to set time period waiting for response from server side.
- Ping mode, where user can enable and select how frequent device will send packets to inform server about active data link. It works when device did not send any records to server in defined time period.
- Static navigation settings, where user can turn static navigation on or off. Additional, user can chose from what source (movement or ignition) static navigation can be deactivated/activated; Static Navigation Mode is a filter, which filters out track jumps when the object is stationary. If Static navigation filter is disabled, it will apply no changes on GPS data. If Static navigation filter is enabled, it will filter changes in GPS position if no movement (configured movement source) or ignition (configured ignition source) is detected (depends on what static navigation settings is selected: movement, ignition or both sources). It allows filtering GPS jumps when object is parked (is not moving) and GPS position is still traced.

- Ignition source, where user can choose between power voltage, digital input 1, digital input 2, digital input 3, digital input 4 and accelerometer as ignition sources. More than one ignition source can be selected at the same moment. User can select movement start and movement stop delay time (in seconds): those parameters are used when ignition source is accelerometer.
- Time synchronization settings, where user can choose from what source (or sources) FMB640 time will be synchronized. User has choice to use only one synchronization source by GNSS. When selected synchronization from NTP, time will be synchronized from NTP server and from GNSS. When selected synchronization from NITZ, time will be synchronized from GSM operator and GNSS. When selected synchronization from NITZ+NTP, time will be synchronized from all three sources (if it is necessary). Every time GNSS fix will be acquired time will be synchronized (if needed). User can select from what NTP server (possible to configure two servers) time will be synchronized, as well as delay after which time synchronization from non-GNSS source will begin.

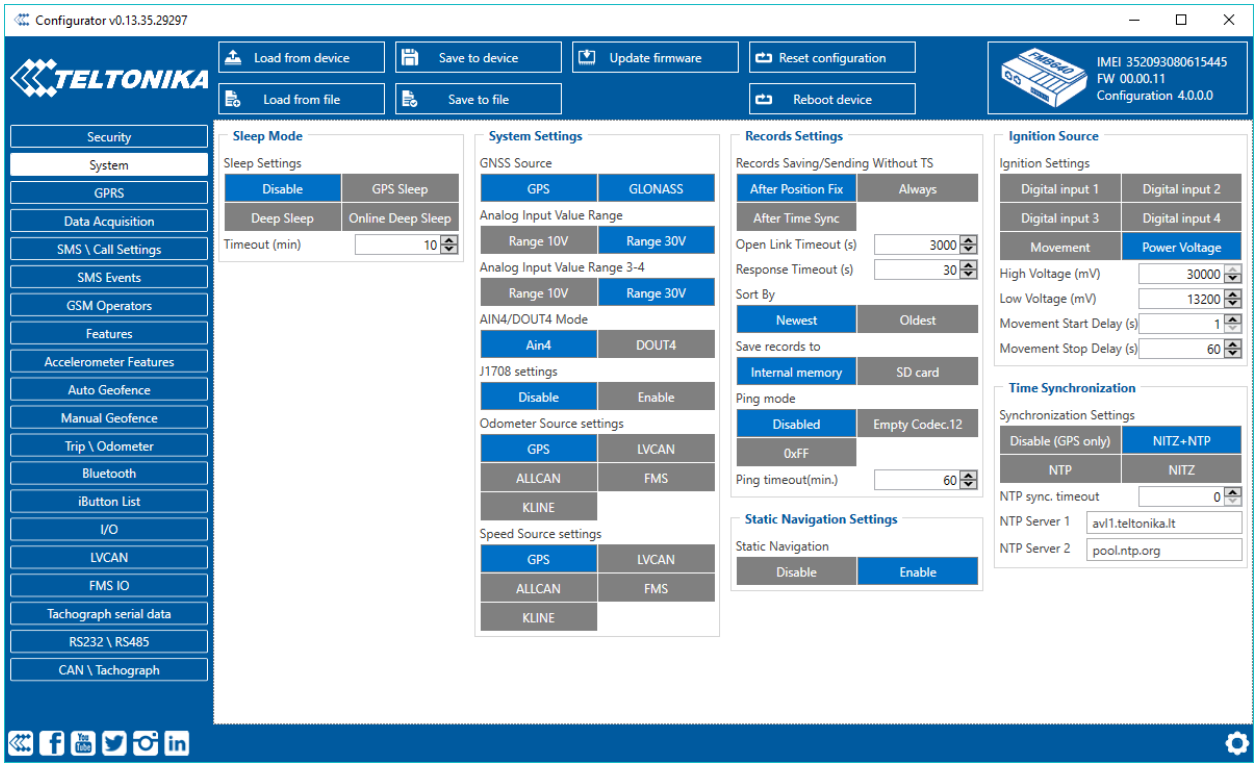

Figure 23. System settings window

6.4.5 GPRS

GPRS defines main parameters for FMB640: GSM operator APN and GPRS username and password (optional – depending on operator), destination server IP and port, and allows to set protocol used for data transfers – TCP or UDP. SIM1 and SIM2 GPRS settings can be configured separate. Both server can be configured separately.

FOTA WEB settings are used for FOTA WEB server connection parameters configuration. Status enables or disables FOTA WEB functionality. In domain and port fields user can enter address and port number of FOTA website. Period is used for timeout of repetitive connection to FOTA WEB server.

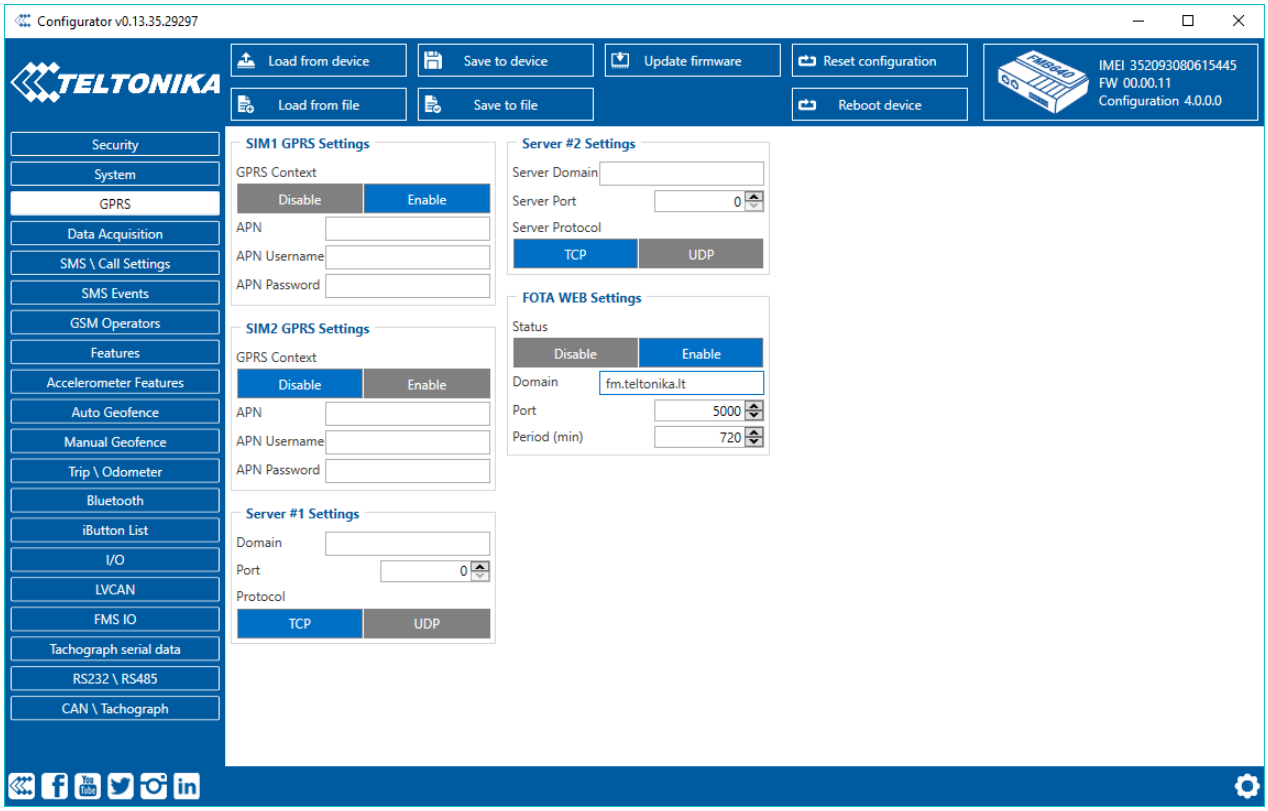

Figure 24

6.4.6 Data Acquisition

Data can be acquired using GPS or I/O elements. GPS data is for basic vehicle tracking, data acquisition by I/O elements gives more specific information.

FMB640 is able to collect records using four methods at the same time: time, distance, speed and angle based data acquisition.

- Min Period – time period change that initializes record save.
- Min Angle – angle change that initializes record save (only if vehicle is moving).
- Min Distance – distance change that initializes record save (only if vehicle is moving).
- Send period – GPRS data sending to server period. Module makes attempts to send collected data to server every defined period. If it does not have enough records (depends on parameter Min. Saved Records described above), it tries again after defined time interval.
- Min speed – minimal speed the vehicle has to move in order to save record (only if neither Min Angle nor Min Distance was triggered). Min speed source can be selected by GPS speed, LVCAN speed, ALLCAN speed, FMS Speed or KLINE speed.
- Min Speed Delta - minimal speed difference between last record and current situation to save a record (only if vehicle is moving).
- Min Saved Records - minimum amount of saved records to start sending process. This condition will be checked when sending timer countdown will be finished.

Time based data acquiring (**Error! Reference source not found.**5) – records are being acquired every time when defined interval of time passes. Entering zero means that data will not be recorded according to time. This method is suitable best for basic position update.

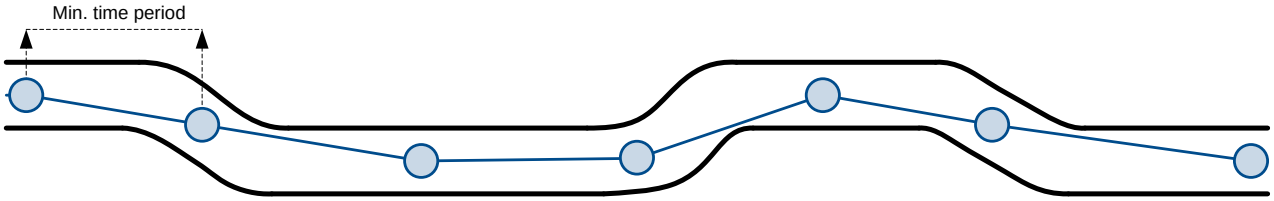

Figure 25 Time based tracking

Distance based data acquiring (**Error! Reference source not found.**6) – records are being acquired when the distance between previous coordinate and current position is greater than defined parameter value. Entering zero means that data won't be recorded. This method is suitable for non-urban territories where moving trajectory is straight.

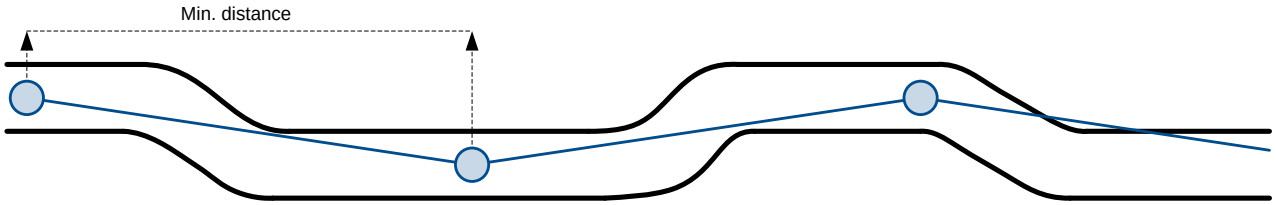

Figure 26 Distance based tracking

Angle based data acquiring (**Error! Reference source not found.**) – records are being acquired when angle difference between last recorded coordinate and current position is greater than the defined value. Entering zero disables data acquisition depending on angle. This method is suitable for urban territories. Note that record generation by angle is performed if vehicle is moving at least 6 km/h.

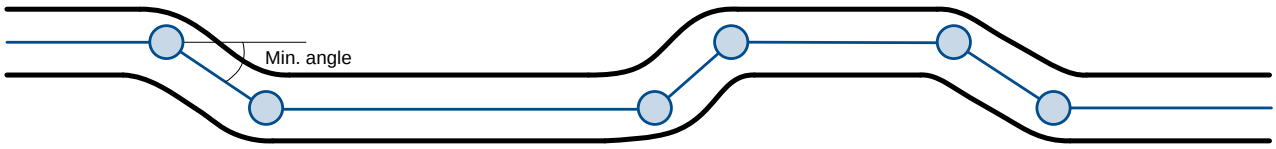

Figure 27 Angle based tracking

Speed based data acquiring (Error! Reference source not found.8) – records are being acquired when speed difference between last recorded coordinate and current position is greater than the defined value. Entering zero disables data acquisition depending on speed. This method is suitable for urban territories. Min speed source can be selected by GPS speed, LVCAN speed, ALLCAN speed, FMS Speed or KLINE speed

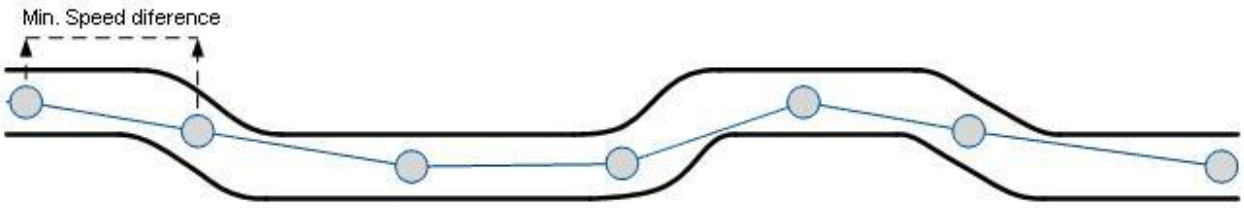

Figure 28 Speed based tracking

6.4.6.1 I/O Data acquisition

Data also can be acquired using input output elements (it's change). All base elements are declared in Data Acquisition and in ***Error! Reference source not found.***

Configuration

Data acquisition by I/O elements can be configured selecting I/O menu in configurator.

Priority: Low – as a regular data; High – generated record are sent immediately to server; Panic - generated record are sent immediately to server and simultaneously the same record as SMS message;

High Level: High range of value input;

Low Level: Low Range of value input;

Averaging constant;

Event generation

There are five record event generation type examples (I/O speed is taken as I/O value example), please refer to Figures below.

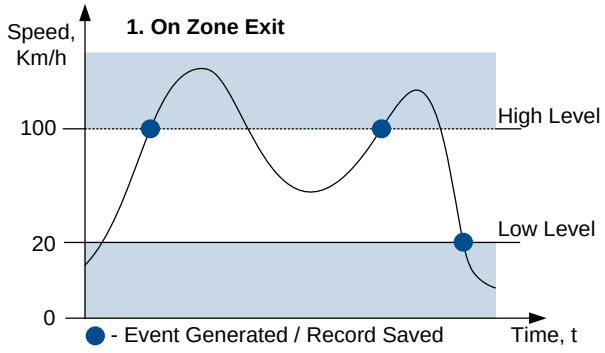

Figure 29 Event On Zone exit

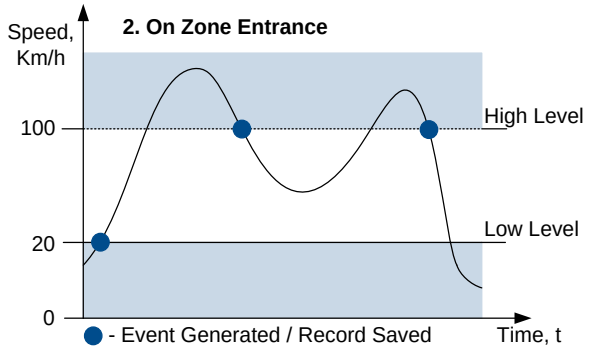

Figure 30 Event On Zone entrance

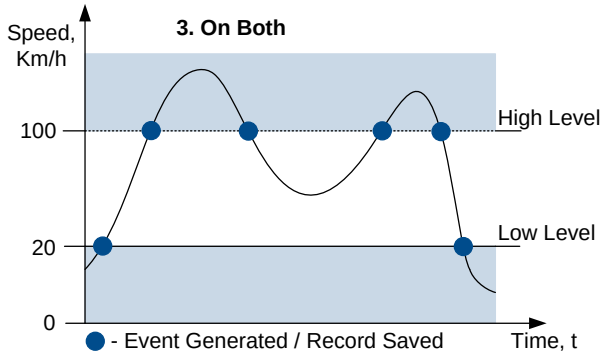

Figure 31 Event On both

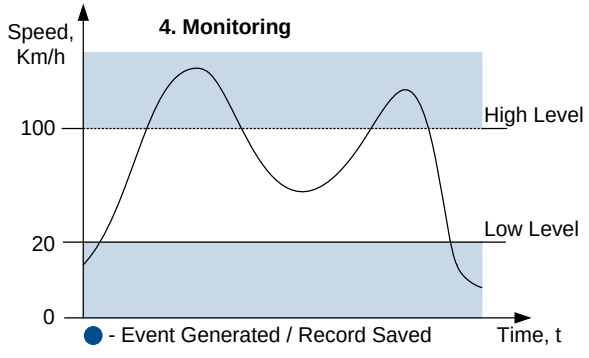

Figure 32 Monitoring

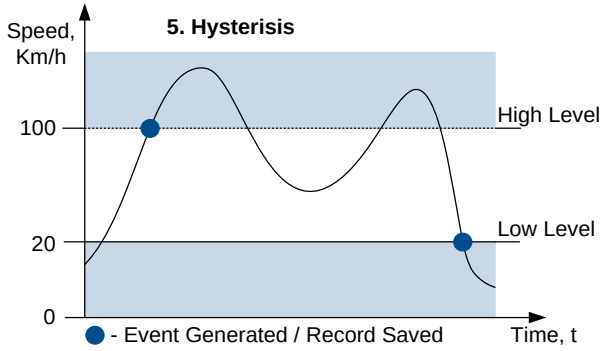

Figure 33 Event on Hysteresis

Event on Zone Entrance: record is generated when actual source value input is between High and Low level ranges which are set in configuration;

Event on Zone Exit: record is generated when actual source value input increases and becomes higher than High level and Low level values;

Event on Both: record is generated when actual source value input increases/decreases and becomes higher/lower than high and low level declared values;

Monitoring: no event at all; I/O values are recorded only when other trigger have worked (GPS acquisition or other I/O trigger)

Hysteresis: record is generated when actual source value input becomes higher than High level value, and decreasing becomes less than Low level value

Event on Change: record is generated on every source value change.

6.4.7 SMS/Call Settings

Essential fields in 'SMS' part is 'Login' and 'Password'. The login and password are used with every SMS sent to FMB640. If login and password are not set, in every SMS sent to FMB640 device two spaces before command have to be used (<space><space><command>).

Command structure with set login and password:

<login><space><password><space><command>, example: "asd 123 getgps"

Phone numbers have to be written in international standard, with using "+" or without using it (in both cases number will be recognized, but when number is without "+" symbol, it will not generate IDD Prefix, which depends on location of phone). If no numbers are entered in authorized numbers list, configuration and sending commands over SMS are allowed from all GSM numbers.

SMS data sending settings allows or does not allow sending AVL data using binary SMS. AVL data will be send by SMS only when there are no GPRS connection. This setting does not affect replies to SMS request messages – answers are always sent back to sender telephone number.

Incoming Call Action - User can enable and select one of the options to set device behaviour after it receives call from other GSM device.

GSM Predefined Numbers might be used to configure SMS events or call triggers. Maximum 10 recipients are allowed in SMS Events Numbers list

Hands Free Call Settings - Digital Input state change to state = 1 can initiate calling process to one of predefined GSM numbers.

6.4.8 SMS Events

FMB640 is able to send SMS messages to Predefined phone numbers (recipients) if any of selected events are triggered. User can send SMS alert message of selected event to maximum 10 predefined phone numbers. AVL ID of parameter has to be entered in configuration to receive its SMS event. Predefined phone numbers must be entered in SMS Events Numbers list in 'SMS \ Call Settings' menu before it will be possible to pair them with AVL ID and SMS event text.

SMS Event Text is used to add additional text to standard SMS event message text.

6.4.9 GSM Operators

Operators list – FMB640 can work in different modes (use different settings) according to the operator list defined. Operator list is used for Data Acquisition Mode switching (see Data Acquisition Mode settings chapter for more details). Modes are changed based on GSM operator FMB640 is connected to.

Operator Blacklist - if user wants that FMB640 do not connect and work with a particular operator it must be written to Operator Black List.

Total 50 operators can be written to each list.

6.4.10 Features & Scenarios

In Features window five different scenarios are available.

ECO or Green driving Scenarios. Gives the ability to periodically monitor drivings characteristics and warn the driver against over accelerating, braking or cornering. Eco driving scenario continuously monitors: accelerating, braking and cornering forces depending on build in accelerometer or Green driving depending on GPS. The device inspects driver if needed. Monitoring sensitivity is configurable.

Any of the four DOUT can be configured and then controlled by scenario for user needs, buzzer or LED for example. Output activation time after harsh event is also configurable.

To save GPRS traffic ECO driving/Green driving event will be **generated (included into records) only** when FMB640 measured values are higher than those set in configuration, without additional I/O settings. Eco driving is based on accelerometer value and Green driving based on

GPS position, so Eco driving is enabled when Green Driving Source is selected as Accelerometer, and Green Driving scenario works when source is GPS.

To prevent generating false events for Green driving, harsh acceleration and harsh braking is monitored only when following conditions are fulfilled:

- Ignition is ON
- Vehicle speed is equal or higher than 10km/h

Harsh cornering is monitored only when following conditions are fulfilled:

- Ignition is ON
- Vehicle speed is equal or higher than 30km/h

To prevent generating false events for ECO driving, harsh acceleration and harsh braking is monitored only when following conditions are fulfilled:

- Ignition is ON

Harsh cornering is monitored only when following conditions are fulfilled:

- Ignition is ON

Mounting Requirements for ECO driving

PLEASE PAY ATTENTION, that ECO driving functionality will operate correctly only if device is mounted into the vehicle in a proper position.

ECO driving functionality operation is based on accelerometer. It is important to mount FMB640 device correctly to avoid functionality malfunctions (first condition). In the picture below (Figure 344) mounting recommendations are displayed. Please **note** that beside those recommendations

1. You can choose how FMB640 is deployed. It means that that there is no effect to measurements if FMB640 top/bottom side points up or down.
2. Device can be deployed at any place in the car.

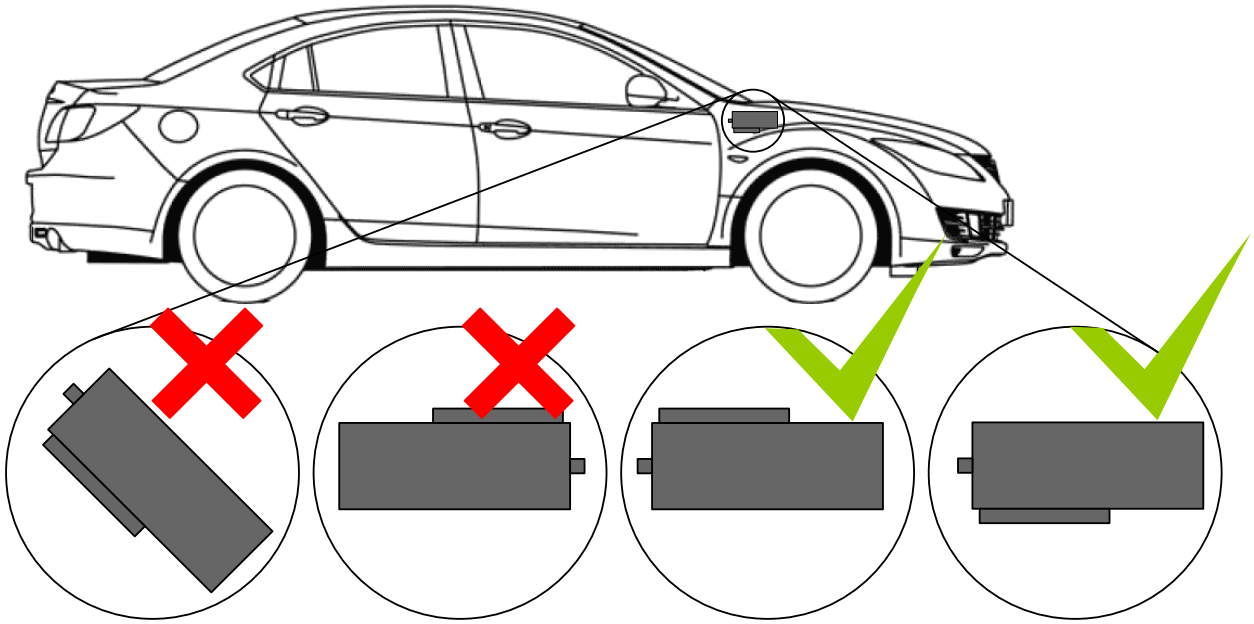

Figure 34 Correct mounting position of the FMB640 in the vehicle

For ECO driving to work properly, device connection pins socket must point towards the vehicles front side. Deviations of +/- 2° are allowed. But it should be as straight as possible.

Deviations of maximum +/- 15° are allowed (Figure 355)

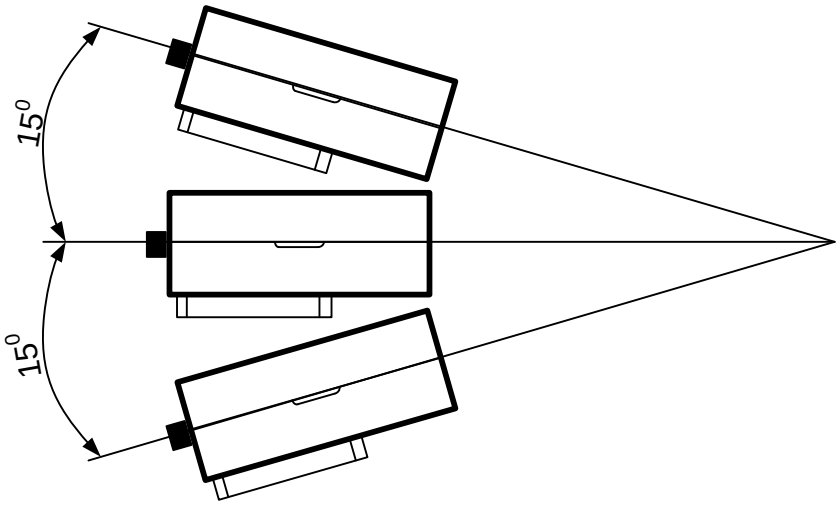

Figure 35 MAX deviation from horizontal plane of FMB640 mounting

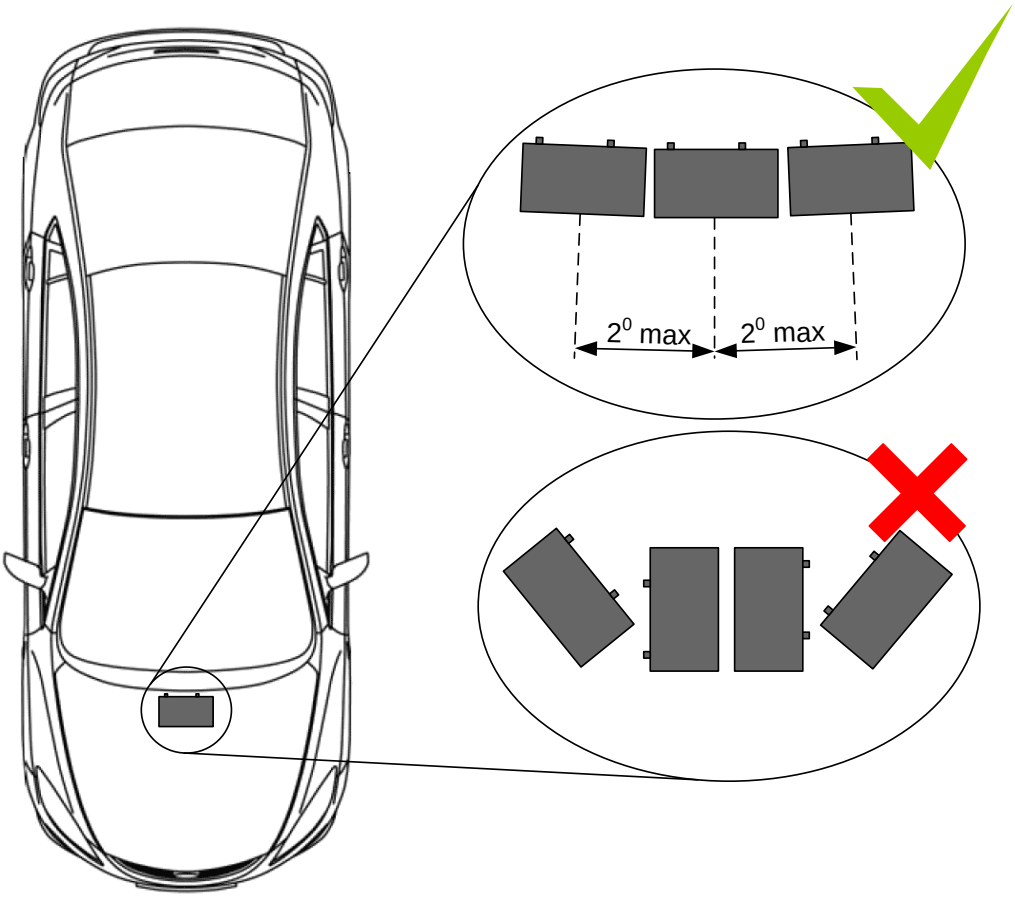

Figure 36 Horizontal position MAX deviation of FMB640 mounting

Horizontal position must be as flat as possible – parallel with vehicle plain.

Configuration of ECO functionality

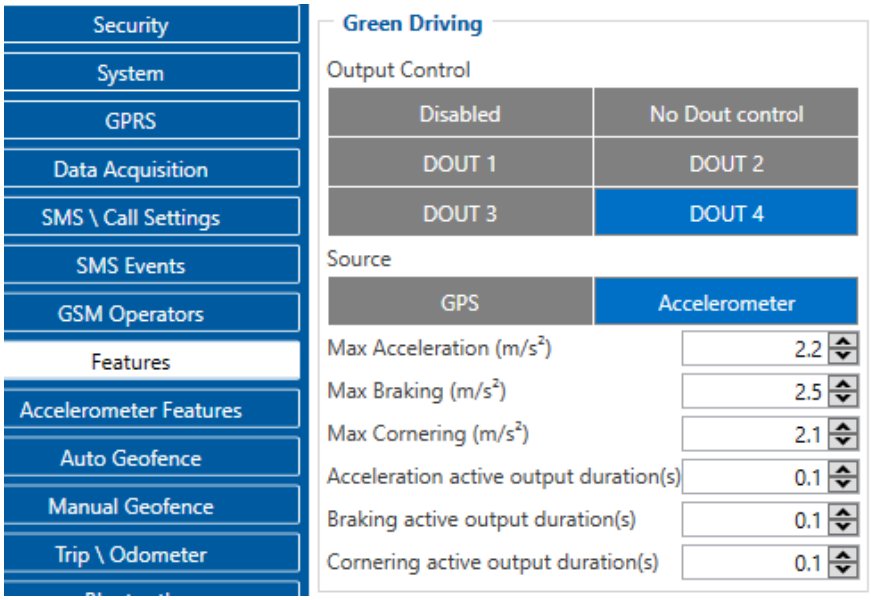

Figure 37 ECO driving configuration

Table 9 ECO driving or Green driving parameters description

ECO driving/Green driving configuration parameter name	Description
Output Control	Select DOUT for scenario to inform about generated event
Scenario source	Select GPS to get data from satellites and use Green driving scenario OR select accelerometer and use ECO driving scenario.
Max Acceleration Force	Value which can be reached while accelerating without triggering harsh acceleration event.
Max Braking Force	Value which can be reached while braking without triggering harsh braking event.
Max Cornering Force	Value which can be reached while cornering without triggering harsh cornering event.
Acceleration Active Output Duration	Set active output duration after harsh acceleration event detected
Braking Active Output Duration	Set active output duration after harsh braking event detected
Cornering Active Output Duration	Set active output duration after harsh cornering event detected

Data output

ECO driving or Green driving functionality generates events on three cases. If vehicles:

- Acceleration exceeds defined parameter value
- Deceleration (braking) exceeds defined value
- Cornering force exceeds defined value

Program continously monitors and process data from accelerometer than decides whether harsh event is detected or not. If any of three cases are satisfied event is generated. Record is saved and sent to server (FMB640 must be configured properly). Event value is multiplied by 10 before sending/saving record to get more precision when displaying **data***.

Digital output No. [1-4] is activated for a period of time to warn driver.

***Example.** If acceleration harsh event of 3.55 m/s2 detected. Record with value 3.55*10 = 35.5 ≈ 36 will be saved ant sent to server.

Over Speeding Scenario. Helps to prevent from exceeding fixed speed and inspects driver if needed. Any DOUT (which is configured) is controlled by scenario for user needs, to manage buzzer, LED etc. When vehicle speed exceeds configured max. speed value scenario is activated, record will be generated and digital output status will be changed to 1 (if configured).

Scenario is activated until current speed decreases below parameter value.

Working Conditions for Overspeeding scenario

1. All scenarios on corresponding Digital Output can be enabled at once.
2. Ignition must be on.

Device module mounting position doesn't have any influence for correct scenario operation.

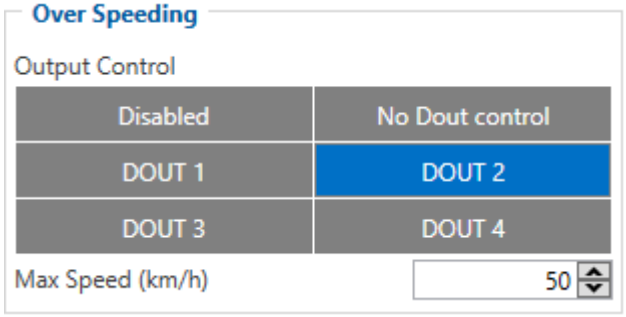

Figure 38 Over Speeding configuration

Jamming detection scenario. Radio jamming is the (usually deliberate) transmission of radio signals that disrupt communications by decreasing the signal to noise ratio. When jamming detection is enabled, FMB640 informs (with buzzer or LED, connected to any DOUT) driver about jamming event.When jamming is detected scenario is activated, record will be generated and digital output status will be changed to 1 (if configured).

Jamming timeout time can be configured. After Jamming trigger count configured timeout (in seconds), digital output control and jamming event will be generated after this timeout. If Jamming ends during timeout counting no event will be generated and output will not be controlled.

You can configure eventual records parameter: when he is disabled scenario status value will be appeared in each AVL record, and when he is enabled scenario status value will be appended only to eventual records.

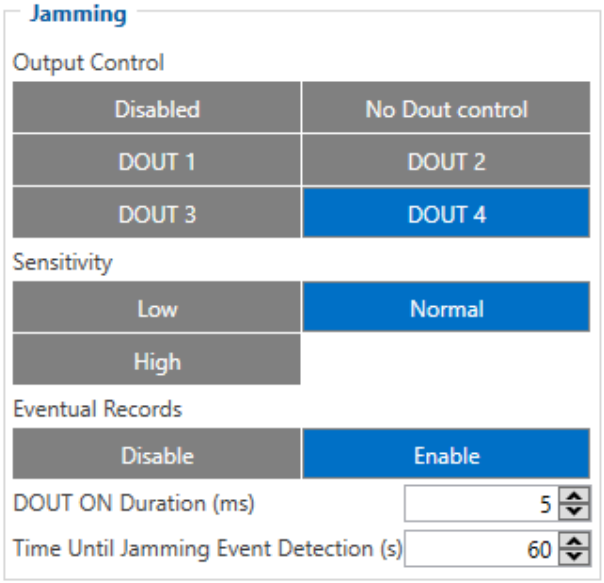

Figure 39 Jamming scenario configuration

Immobilizer/Authorized driving scenarios. Authorized driving feature gives ability to use vehicle for 500 specific iButton owners (specified in iButton list). Any DOUT (which is configured) is controlled by scenario for user needs, to manage buzzer, LED etc.
Vehicle can be used only if iButton is connected. In this scenario iButton list is not used - connect any iButton to pass Immobilizer security. Any DOUT (which is configured) is controlled by scenario for user needs. DOUTX is continuously OFF. DOUTX turns ON if Ignition turns ON (Din1=1). After iButton ID is read (any iButton is attached), DOUTX turns OFF. After iButton identification DIN1 (ignition) can be turned OFF (Din1=0) for no longer than 30 seconds, otherwise immobilizer must be repeated.

Immobilizer (iButton list checking disabled) Vehicle can be used only if iButton is connected. In this scenario iButton list is not used; connect any iButton to pass Immobilizer security. Selected DOUT is controlled by scenario for user needs.

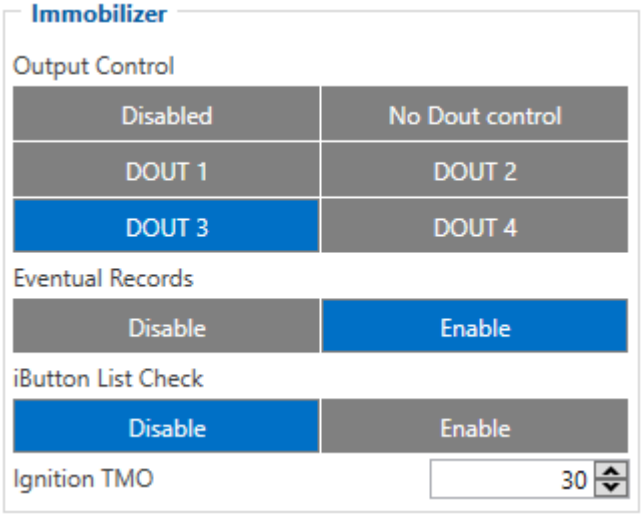

Figure 40 Immobilizer configuration

Authorized Driving (iButton list checking enabled). Gives ability to use vehicle for 500 specific iButton owners (specified in iButton list). Selected DOUT is controlled by scenario for user needs, to manage buzzer, LED etc.

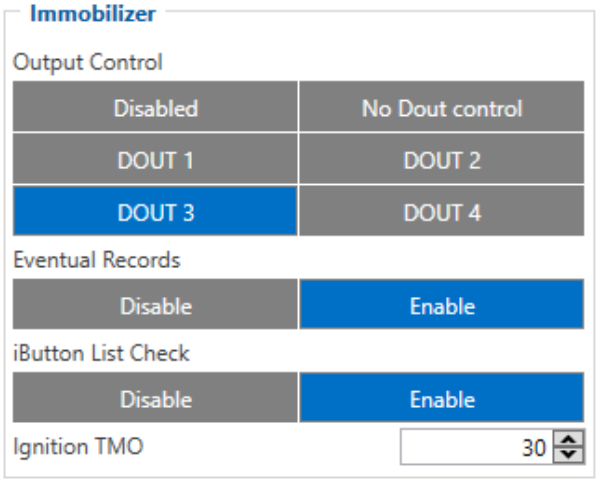

Figure 41 Authorized Driving configuration

Output Control. Selects which DOUT will control Immobilizer Scenario.

Eventual Records. If disabled, status of scenario will be sent with each record, otherwise only when such event occurs.

IButton list check. When disabled turn on Immobilizer Scenario, otherwise it's Authorized driving

Ignition timeout. Time that need to be passed when ignition (DIN1) turns off to reactivate scenario.

iButton Read Notification. If scenario is enabled, when iButton is attached and is successfully read, configured DOUT goes ON for configurable amount of time (min: 0.1 s; max: 5.00 s; default: 0.2 s). If Immobilizer scenario is enabled and iButton's indication scenario is enabled and the same DOUT controls are chosen then in case iButton is attached DOUT is not affected.

IButton's event generation works as a standard IO event generation

6.4.11 Accelerometer Features

FMB640 has additional scenarios whose are highly dedicated to work with accelerometer.

Excessive Idling scenario. If ignition (DIN1 or Power Voltage) is on and vehicle is not moving, FMB640 after configured time period generate event. When vehicle starts moving FMB640 after configured time period generate event that vehicle idle time ends. You can configure time it takes to turn on this scenario (Time to Stopped). Scenario is activated until vehicle starts moving and keeps moving (moving is detected only from accelerometer) for amount of time that is configured. You can configure time it takes to turn OFF this scenario (Time to Stopped).

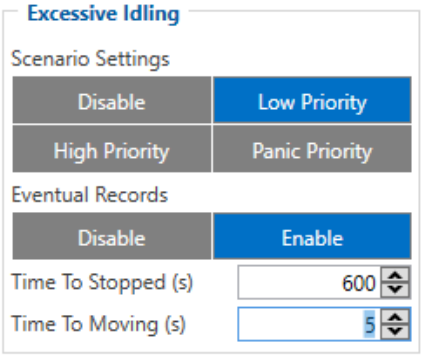

Figure 42 Excessive Idling configuration

Towing Detection scenario. Towing detection features helps to inform driver about car deporting. FMB640 generates event when car is being towed or lifted, for example in case of vehicle evacuation.

FMB640 activates towing function when these

conditions are met:

1. Ignition (configured Ignition Source) is OFF.
2. Activation Timeout (set in Towing detection features) is reached.

When Activation Timeout is reached and Ignition is still in OFF state, FMB640 monitors accelerometer data. If Acceleration or Angle value reaches configured threshold for configured Duration (in ms), check Ignition state. If Ignition is still OFF during configured "Ignition check after Event Timeout time, then event is generated. If configured - sends SMS event or makes a call.

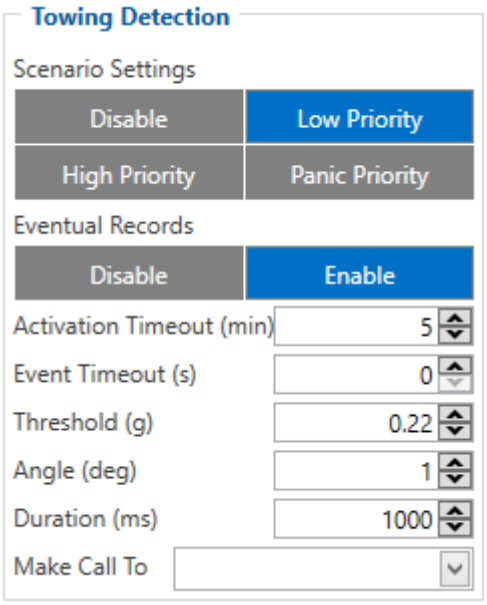

Figure 43 Towing Detection configuration

Crash Detection scenario. Scenario is activated when Crash is detected by device using acceleration values.

Crash Detection functionality can be set according to these settings:

1. Threshold (mg)
2. Duration (ms)

If accident happens and FMB640 detects acceleration value higher than set threshold value during set time period, then device will generate an event. Threshold and duration values are set depending of accident power which you want to detect. FMB640 can detect a slight tapping on the device (Threshold=100mg, Duration=1ms) or can detect severe accident (Threshold=4000mg, Duration=5ms).

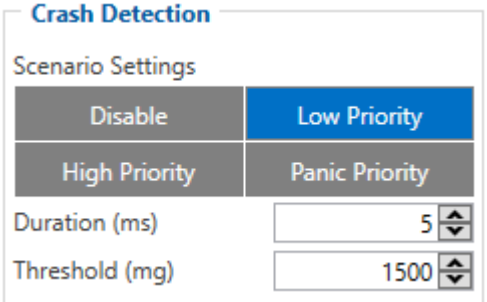

Figure 44 Crash Detection configuration

6.4.12 Auto Geofence

AutoGeofence – the last known position after movement = off. If your car is being taken away – you can be notified. The shape and size of the geofence zones are configurable. There is a possibility to state whether entering in or out of the geofence triggers an asynchronous message.

Auto Geofencing option can be configured by following parameters (**Error! Reference source not found.**5):

- Priority – Priority of generated event, which will be applied to saved record.
- Eventual Records - Scenario status will be (or not, if disabled) sent with each AVL record.
- Generate Event:
  - On Entrace – Event generation on Geofence entrance.
  - On Exit – Event generation on Geofence exit.
  - On Both - Event generation on Geofence entrance or exit.
- Activation Timeout – Time period before Geofence is activated after vehicle stops.
- Radius - Radius of circle where in center of it is last coordinates of device when vehicle engine was running.
- Deactivate By:
  - Ignition – if ignition becomes high it will drop AutoGeofenze Zone
  - iButton – if iButton is attached it will drop AutoGeofence Zone

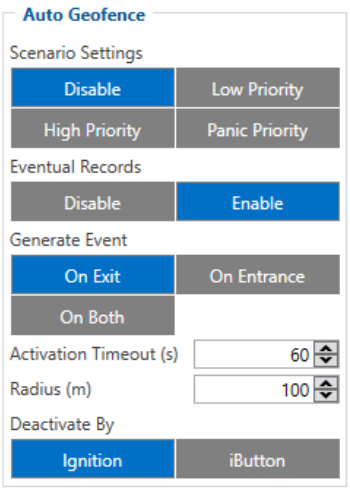

Figure 45 Autogeofence

Auto Geofencing does not require entering coordinates, instead it requires GPS visibility. If vehicle stopped and activation timeout is reached, Auto Geofence will be created around the vehicles last position by set Radius value. Auto Geofence event generation works the same as manual Geofencing.

6.4.13Manual Geofence

FMB640 has 50 configurable Geofence zones and it can generate event when defined Geofence zone border has been crossed. Or overspeeding is occured in a configured geofence zone.

- Priority – priority of Geofence event: low, high or panic. These levels define priority of

event information sending to server. See I/O element description for more details about priorities.

- Generate event (On entrance, On exit, On both) – choose when record will be generated (or no event);
- Eventual Records - choose if it is needed to send status of that geozone with each record
- Frame border – frame border is an additional border around Geofence zone. It is additional area around defined zone used to prevent false event recording when object stops on the border of the area and because of GPS errors some records are made inside area and some – outside. Event is generated only when both borders are crossed.
- Shape – can be rectangular or circle. Shape details can be entered in fields or they will be automatically filled after geofence will be drawn on the map.
- Geofence overspeed control – Option to use any DOUT if overspeeding event happens in a configured geozone.
- Max allowed speed – Max allowed speed in a configured geozone.

Figure 46 Geofence border

Geofence zone - User can configure up to 50 geofence zones without interfering DOUT control or allowed speed limit of other zones.

6.4.14 Trip \ Odometer

Trip window offers user to configure Trip feature. Trip customizable feature enables user extended monitoring of performed trips (from engine start at present location to engine stop at arrived location), log their start and stop points, view driven total distance. Event will be **generated (included into send records) only** when trip starts and finishes.

Start Speed (km/h) – GPS speed has to be greater than the specified Start Speed in order to detect Trip Start.

Ignition OFF Timeout (s) – timeout to wait if ignition (configured ignition source) was off, to detect Trip stop.

Distance counting mode – Between Records or Continuous can be chosen. For this feature I/O Trip Odometer must be enabled.

If I/O Trip Odometer is enabled and Continuous distance counting variable (Mode) is set to Continuous, **Trip distance** is going to be counted continuously (**from Trip start to Trip stop**). This value is written to I/O Trip Odometer value field. When Trip is over and next Trip begins, Trip Odometer value is reset to zero. When the next trip starts counting continuously starts from the beginning again.

If I/O Trip Odometer is enabled and Continuous Distance Counting variable (Mode) is set "Between Records", then the distance is going to be counted only between every record made. This value is written to I/O Trip Odometer value field and reset to zero every new record until Trip stops. If later all Odometer values are summed up manually, the user gets the distance driven during the whole period of the Trip.

6.4.15 Blue-tooth

FMB640 can connect to Blue-tooth handsfree adapter for two way communication and also you can connect device to 'blue-tooth terminal' app in your android smart phone to get terminal log via Blue-tooth.

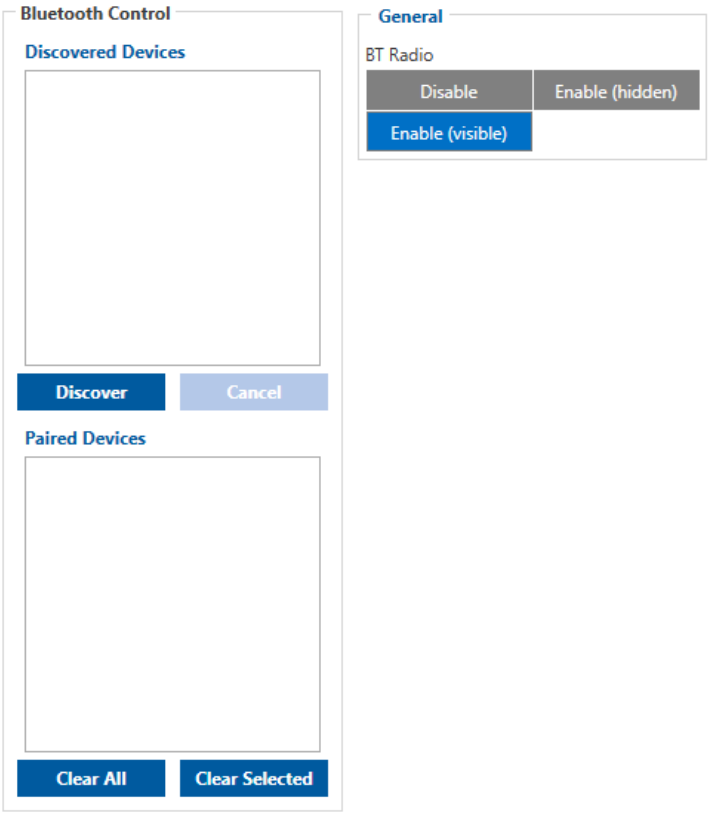

Figure 47. Blue-tooth menu

User can start Blue-tooth devices discovery with 'Discover' button. Before that, configuration has to be saved with BT radio parameter enabled.

If you are sure that your device has it's Blue-tooth enabled but you couldn't find it in the list - try again because only first 10 found devices are shown in the window.

6.4.15.1 Blue-tooth log

In order to get log through Blue-tooth you need to set Blue-tooth power in Blue-tooth tab.

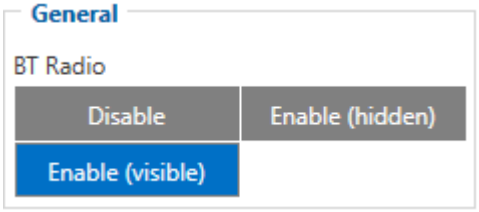

Figure 48 Blue-tooth Power Settings

After turning blue-tooth module ON you need to pair it with your phone or tablet.

1. Download ‚Blue-tooth Terminal' app and scan for visible BT devices using your Android smartphone and connect to FMB640 device. By default FMB BT name: FMB640_last_7_imei_digits
2. To start log enter the command in terminal: **.log:1** then wait few minutes while log is running. After this press "Save" button in menu. You will find saved log file in device folder (My Files/Blue-toothTerminal), select log files and press button Share via Email and

6.4.15.2 Blue-tooth Headset

You need to configure FMB640 Blue-tooth settings for proper connection to hands-free adapter. Below are required steps:

1. Connect FMB640 device to PC using USB cable.
2. Launch **FMB Configurator** and connect to FMB device**.**

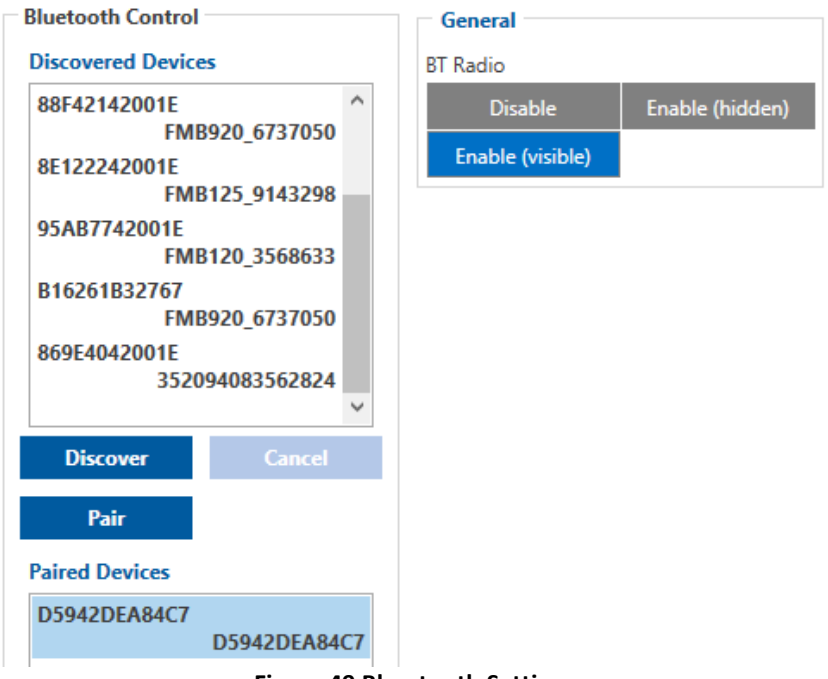

Figure 49 Blue-tooth Settings

3. In Blue-tooth menu, start BT devices discovery by pressing “Discover” button. Keep trying to discover until you find your Blue-tooth headset name in the list (Maximum devices in the list = 10, so it needs to restart search if there is no required device in the list). If you can’t find it, make sure your headset is working.

4. When you find your headset, press “Pair” button. Most of headsets will let you know if connection succeeded. Hands Free adapter should make a special sound in ear from speaker or its led identification should change to inform about successful connection. To check if adapter is successfully connected, call to FMB640 device, Hands Free device should start ringing. If you later restart FMB640 it will automatically connect to this adapter.

6.4.16iButton List

IButton list is used to enter authorized iButton ID codes, which are used to authenticate driver in Immobilizer/Autohorized driving, iButton Read Notification scenarios as well as in Auto Geofencing.

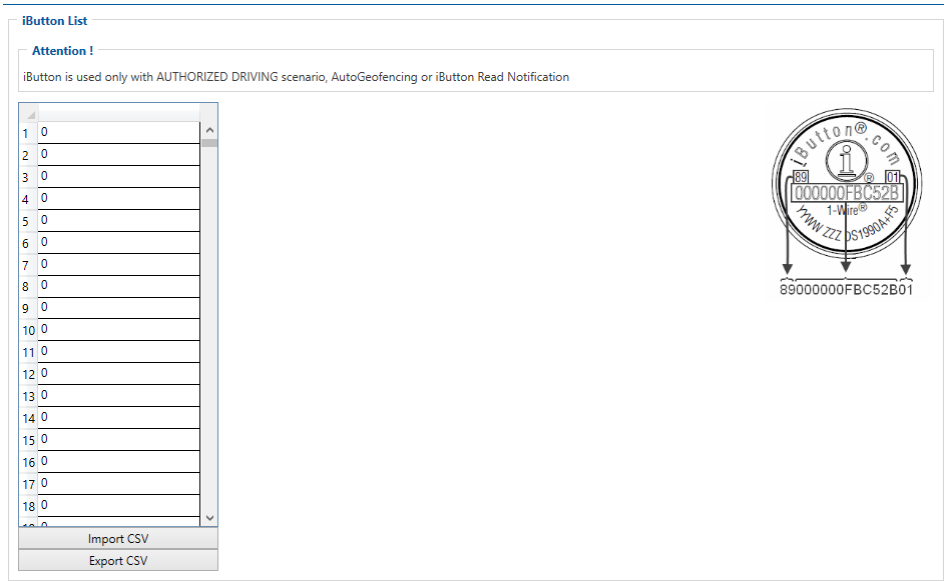

Figure 50. iButton Configuration

IButton value must be entered as it is written on it. User can save 500 iButtons to .csv file and read them from same file using Import CSV and Export CSV buttons. User can also enter iButton key ID in iButton ID list by attaching iButton key to reader then connecting reader to device after that click ‘copy ID’ and paste iButton key in iButton ID list.

6.4.17I/O

When no I/O element is enabled, AVL packet comes with GNSS information only. After enabling I/O element(s) AVL packet along with GNSS information contains current value(s) of enabled I/O element.

Current value – if device is connected to configurator all current I/O values are displayed in this column.

Priority field – allows enabling I/O element and set them priority so it is added to the data packet and is sent to the server. By default 12 I/O elements with low priority are enabled: Ignition, Movement, Data Mode, GSM Signal, Sleep mode, GNSS Status, GNSS PDOP, GNSS HDOP, External Voltage, Speed, Battery Voltage and Battery Current. Priority (AVL packet priority) can

be Low, High or Panic. All records made by FMB640 are regular. Regular packets are sent as Low priority records. When low priority event is triggered, FMB640 makes additional record with indication that the reason for that was I/O element change (depends from Operand configuration). When High priority is selected, module makes additional record with high priority flag and sends event packet immediately to the server by GPRS. Panic priority triggers same actions as high priority, but if GPRS fails, it sends AVL packet using SMS data sending mode if **SMS data sending is enabled and data send number is written in SMS \ Call Settings**.

High and Low levels – define I/O value range. If I/O value enters or exits this range, FMB640 generates event. "Operand" parameter defines when to generate event: On Exit, On Entrance, On Both, On Hysteresis and On Delta Change.

Event only - when selected NO, I/O element status value will be appeared in each AVL record, and when selected YES, I/O element status value will be appended only to eventual records.

Operand

FMB640 available I/O list

Table 10 PERMANENT I/O elements list description

Permanent I/O elements (are always sent (with every record) to server if enabled)			
No.	Property Name	Bytes	Description
1	Ignition	1	0 – ignition is off, 1 – ignition is on
2	Movement sensor	1	0 – not moving, 1 – moving.
3	Data Mode		
4	GSM signal level	2	Value in scale 1 – 5
5	Sleep mode	1	0 – not sleep mode, 1 – GNSS sleep mode, 2 - Deep Sleep, 3 - Online Deep Sleep.
6	GNSS status	2	0-off/ 1-no antenna / 2- no fix/ 3-got fix/ 4-sleep/ 5-over current
7	GNSS PDOP	2	Probability * 10; 0-500
8	GNSS HDOP	2	Probability * 10; 0-500
9	External Voltage	2	Voltage: mV, 0 – 30 V
10	Speed	2	Value in km/h, 0 – xxx km/h
11	GSM Cell ID	4	Base station ID.Valid CID ranges are from 0 to 65535 on GSM and CDMA networks and from 0 to 268435455 on UMTS and LTE networks.
12	GSM Area Code	2	Location Area code (LAC), it depends on GSM operator. It provides unique number which assigned to a set of base GSM stations. Max value: 65536
13	Battery Voltage	2	Voltage: mV
14	Battery Current	2	Voltage: mA
15	Active GSM Operator	4	Currently used GSM Operator code
16	Trip Odometer value	4	Distance between two records: m
17	Total Odometer	4	Total odometer value: m
18	Digital Input Status 1	1	Logic: 0 / 1
19	Digital Input Status 2	1	Logic: 0 / 1
20	Digital Input Status 3	1	Logic: 0 / 1
21	Digital Input Status 4	1	Logic: 0 / 1
22	Analog Input 1	2	Voltage: mV, 0 – 30 V
23	Analog Input 2	2	Voltage: mV, 0 – 30 V
24	Analog Input 3	2	Voltage: mV, 0 – 30 V
25	Digital Output Status 1	1	Logic: 0 / 1

Permanent I/O elements (are always sent (with every record) to server if enabled)			
No.	Property Name	Bytes	Description
26	Digital Output Status 2	1	Logic: 0 / 1
27	Digital Output Status 3	1	Logic: 0 / 1
28	Digital Output Status 4	1	Logic: 0 / 1
29	Axis X	2	Axis X value
30	Axis Y	2	Axis Y value
31	Axis Z	2	Axis Z value
32	IMSI	8	IMSI code
33	ICCID	24	ICCID Code
34	SD Status	1	Shows status code of SD status
35	Dallas Temperature 1	8	10 * Degrees (°C), -55 - +115, if 3000 – Dallas error
36	Dallas Temperature 2	8	10 * Degrees (°C), -55 - +115, if 3000 – Dallas error
37	Dallas Temperature 3	8	10 * Degrees (°C), -55 - +115, if 3000 – Dallas error
38	Dallas Temperature 4	8	10 * Degrees (°C), -55 - +115, if 3000 – Dallas error
39	Dallas Temperature 5	8	10 * Degrees (°C), -55 - +115, if 3000 – Dallas error
40	Dallas Temperature 6	8	10 * Degrees (°C), -55 - +115, if 3000 – Dallas error
41	Dallas ID 1	2	Shows ID of first Dallas sensor
42	Dallas ID 2	2	Shows ID of second Dallas sensor
43	Dallas ID 3	2	Shows ID of third Dallas sensor
44	Dallas ID 4	2	Shows ID of fourth Dallas sensor
45	Dallas ID 5	2	Shows ID of fifth Dallas sensor
46	Dallas ID 6	2	Shows ID of sixth Dallas sensor
47	iButton ID	8	iButton ID number
48	PCB Temperature	2	10 * Degrees (°C)
49	Fuel Counter	4	Difference of generated impulses on two signal lines
50	RFID COM1	8	Displays activated RFID card ID from COM1
51	RFID COM2	8	Displays activated RFID card ID from COM2
52	LLS #1Fuel	2	Fuel level, measured by LLS sensor on COM, in kvants or liters.
53	LLS #2 Fuel	2	Fuel level, measured by LLS sensor on COM, in kvants or liters.
54	LLS #3 Fuel	2	Fuel level, measured by LLS sensor on COM, in kvants or liters.
55	LLS #4 Fuel	2	Fuel level, measured by LLS sensor on COM, in kvants or liters.
56	LLS #5 Fuel	2	Fuel level, measured by LLS sensor on COM, in kvants or liters.
57	LLS #1 temperature	1	Fuel temperature, measured by LLS sensor on COM, in degrees Celsius.
58	LLS #2 temperature	1	Fuel temperature, measured by LLS sensor on COM, in degrees Celsius.
59	LLS #3 temperature	1	Fuel temperature, measured by LLS sensor on COM, in degrees Celsius.
60	LLS #4 temperature	1	Fuel temperature, measured by LLS sensor on COM, in degrees Celsius.
61	LLS #5 temperature	1	Fuel temperature, measured by LLS sensor on COM, in degrees Celsius.
62	Ultrasonic UL202 Fuel level 1	1	UL202 COM1 Fuel Level
63	Ultrasonic UL202 Fuel level 2	1	UL202 COM2 Fuel Level

Permanent I/O elements (are always sent (with every record) to server if enabled)			
No.	Property Name	Bytes	Description
64	Ultrasonic UL202 Status 1	1	UL202 COM1 Status
65	Ultrasonic UL202 Status 2	1	UL202 COM2 Status
66	Network Type	1	Logic: 0 / 1

Table 11 EVENTUAL I/O elements list description

Eventual IO elements (generated and sent record to server only if appropriate conditions are met)			
No.	Property Name	Bytes	Description
87	Geofence zone 01	1	Event: 0 – target left zone, 1 – target entered zone
88	Geofence zone 02	1	Event: 0 – target left zone, 1 – target entered zone
89	Geofence zone 03	1	Event: 0 – target left zone, 1 – target entered zone
90	Geofence zone 04	1	Event: 0 – target left zone, 1 – target entered zone
91	Geofence zone 05	1	Event: 0 – target left zone, 1 – target entered zone
92	Geofence zone 06	1	Event: 0 – target left zone, 1 – target entered zone
93	Geofence zone 07	1	Event: 0 – target left zone, 1 – target entered zone
94	Geofence zone 08	1	Event: 0 – target left zone, 1 – target entered zone
95	Geofence zone 09	1	Event: 0 – target left zone, 1 – target entered zone
96	Geofence zone 10	1	Event: 0 – target left zone, 1 – target entered zone
97	Geofence zone 11	1	Event: 0 – target left zone, 1 – target entered zone
98	Geofence zone 12	1	Event: 0 – target left zone, 1 – target entered zone
99	Geofence zone 13	1	Event: 0 – target left zone, 1 – target entered zone
100	Geofence zone 14	1	Event: 0 – target left zone, 1 – target entered zone
101	Geofence zone 15	1	Event: 0 – target left zone, 1 – target entered zone
102	Geofence zone 16	1	Event: 0 – target left zone, 1 – target entered zone
103	Geofence zone 17	1	Event: 0 – target left zone, 1 – target entered zone
104	Geofence zone 18	1	Event: 0 – target left zone, 1 – target entered zone
105	Geofence zone 19	1	Event: 0 – target left zone, 1 – target entered zone
106	Geofence zone 20	1	Event: 0 – target left zone, 1 – target entered zone
107	Geofence zone 21	1	Event: 0 – target left zone, 1 – target entered zone
108	Geofence zone 22	1	Event: 0 – target left zone, 1 – target entered zone
109	Geofence zone 23	1	Event: 0 – target left zone, 1 – target entered zone
110	Geofence zone 24	1	Event: 0 – target left zone, 1 – target entered zone
111	Geofence zone 25	1	Event: 0 – target left zone, 1 – target entered zone
112	Geofence zone 26	1	Event: 0 – target left zone, 1 – target entered zone
113	Geofence zone 27	1	Event: 0 – target left zone, 1 – target entered zone
114	Geofence zone 28	1	Event: 0 – target left zone, 1 – target entered zone
115	Geofence zone 29	1	Event: 0 – target left zone, 1 – target entered zone
116	Geofence zone 30	1	Event: 0 – target left zone, 1 – target entered zone
117	Geofence zone 31	1	Event: 0 – target left zone, 1 – target entered zone
118	Geofence zone 32	1	Event: 0 – target left zone, 1 – target entered zone
119	Geofence zone 33	1	Event: 0 – target left zone, 1 – target entered zone
120	Geofence zone 34	1	Event: 0 – target left zone, 1 – target entered zone

Eventual IO elements (generated and sent record to server only if appropriate conditions are met)			
No.	Property Name	Bytes	Description
121	Geofence zone 35	1	Event: 0 – target left zone, 1 – target entered zone
122	Geofence zone 36	1	Event: 0 – target left zone, 1 – target entered zone
123	Geofence zone 37	1	Event: 0 – target left zone, 1 – target entered zone
124	Geofence zone 38	1	Event: 0 – target left zone, 1 – target entered zone
125	Geofence zone 39	1	Event: 0 – target left zone, 1 – target entered zone
126	Geofence zone 40	1	Event: 0 – target left zone, 1 – target entered zone
127	Geofence zone 41	1	Event: 0 – target left zone, 1 – target entered zone
128	Geofence zone 42	1	Event: 0 – target left zone, 1 – target entered zone
129	Geofence zone 43	1	Event: 0 – target left zone, 1 – target entered zone
130	Geofence zone 44	1	Event: 0 – target left zone, 1 – target entered zone
131	Geofence zone 45	1	Event: 0 – target left zone, 1 – target entered zone
132	Geofence zone 46	1	Event: 0 – target left zone, 1 – target entered zone
133	Geofence zone 47	1	Event: 0 – target left zone, 1 – target entered zone
134	Geofence zone 48	1	Event: 0 – target left zone, 1 – target entered zone
135	Geofence zone 49	1	Event: 0 – target left zone, 1 – target entered zone
136	Geofence zone 50	1	Event: 0 – target left zone, 1 – target entered zone
137	Auto Geofence	1	Event: 0 – target left zone, 1 – target entered zone
138	Trip	1	1 – trip start, 0 – trip stop
139	Immobilizer	1	1 – iButton connected
140	Authorized driving	1	1 – authorized iButton connected
141	ECO driving/Green driving type	1	1 – harsh acceleration, 2 – harsh braking, 3 - harsh cornering
142	ECO driving/Green driving value	1	Depending on ECO driving/Green driving type: if harsh acceleration, braking and cornering – g*10 m/s^2
143	Over Speeding	1	At over speeding start km/h, at over speeding end km/h
144	Excessive idling	1	1- idling detected, 0- idling ended
145	Jamming detection	1	1 – jamming start, 0 – jamming stop
146	Crash detection	1	1 – crash event occured

There are two types of operations with Permanent I/O elements: simple monitoring and event generating. Monitoring method is used when current I/O information needed with regular GPS coordinates. Event generating method is used when additional AVL packet is needed when current value of I/O exceeds predefined High and Low levels. I/O settings allow defining I/O event criteria.

I/O configuring

I/O configuration has 8 columns (**Error! Reference source not found.**).

Table 12 I/O Configuration window description

Pos. No.	DESCRIPTION
1.	Property inputs list
2.	Measurement Units

Pos. No.	DESCRIPTION
3.	Priority - AVL packet priority. There are Low, High, and Panic priorities. If 'None' priority is selected I/O element won't be send with data packets. Regular packets are sent as Low priority records. When low priority event is triggered, FMB640 makes additional record with indication that the reason for that was I/O element change. When High priority is selected, module makes additional record with high priority flag and sends event packet immediately to the server. First it tries to send it using GPRS. If GPRS fails, it doesn't send AVL packet using SMS mode, if SMS is enabled in SMS settings. Panic priority event forces module to send AVL packet to server via GPRS and if GPRS fails, it sends AVL packet using SMS mode, if SMS is enabled in SMS settings.
4.	High Level - define I/O value range. If I/O value enters or exits this range, FMB640 generates event.
5.	Low Level – define I/O value range. If I/O value enters or exits this range, FMB640 generates event.
6.	Event only option can be enabled to keep specific I/O element out of regular records and add it only in case it is the source of event.
7.	Operand – defines when to generate event. When value enters defined range, exits it or both enters and exits.
8.	Averaging Constant – it is an I/O event delay parameter. In some applications there is no need to generate events on every I/O range enter/exit immediately. Sometimes it is necessary to wait some time interval before event generating to be ensuring that current event is not a short time event. Averaging constant allows setting I/O event delay (averaging). If I/O value is entering or leaving predefined range, it must have same value for Averaging constant time. One unit of averaging constant value equals 100 milliseconds. Selected data source value input averaging constant are calculated by following formula: $$VAL^{Mean} = \frac{VAL^{Mean-1} \times (CONST - 1) + REALVAL}{CONST}$$ Where: VAL^{Mean} – Value calculated during actual cycle[4]; VAL^{Mean-1} – Value calculated during previous cycle; CONST – Averaging constant; REALVAL – Real value detected on digital input.

6.4.17.1 I/O properties

I/O properties are additional data sources, which are recorded along with usual GPS data. Parameter defines I/O property type of priority: 0 is disabled, 1 is low, 2 – high, 3 – panic.

Table 13 I/O Type of Priority

Minimum value	Maximum value	Recommended value	Goes with (depends on) parameters	Value type
0	3	0	I/O#0 property parameter /O#1 High level (ID=50002)I/O#1	S8

[4] One cycle equal to 100 ms.

			Low level (ID=50003)I/O#1 averaging length (ID=50005)	

I/O#0 High level

Parameter defines high value of triggered I/O property. This parameter is used to set thresholds for I/O properties to generate events.

Table 14 I/O High Value

Minimum value	Maximum value	Recommended value	Goes with (depends on) parameters	Value type
0	9999999	1	I/O#0 property parameter 1 operand (ID=50001)I/O#1 Low level (ID=50003)I/O#1 averaging length (ID=50005)	S32

I/O#0 Low level

Parameter defines low value of triggered I/O property. This parameter is used to set thresholds for I/O properties to generate events.

Table 15 I/O Low Value

Minimum value	Maximum value	Recommended value	Goes with (depends on) parameters	Value type
0	9999999	0	I/O#0 property parameter 1 operand (ID=50001)I/O#1 High level (ID=50002)I/O#1 averaging length (ID=50005)	S32

I/O#0 logic operand

Parameter defines when event is sent: 0 is event on exit, 1 – on entrance, 2 – on both, 3 – monitoring, 4 – hysteresis, 5 – on change.

Table 16 I/O Logic Operand

Minimal value	Maximum value	Recommended value	Goes with (depends on) parameters	Value type
0	5	2	I/O#1 operand (ID=50001) I/O#1 operand (ID=50001)I/O#1 High level (ID=50002)I/O#1 Low level (ID=50003)I/O#1 averaging length (ID=50005)I/O#1 property parameter priority Ignition (ID=50000)	S8

I/O#0 averaging constant

Parameter defines I/O property sample length to average. If no averaging needed default value is 10.

Table 17 I/O Averaging constant

Minimum value	Maximum value	Recommended value	Goes with (depends on) parameters	Value type
1	99999999	1	I/O#1 operand (ID=50001)I/O#1 property parameter priority Ignition (ID=50000) I/O#1 operand (ID=50001)I/O#1 High level (ID=50002)I/O#1 Low level (ID=50003)	S32

To configure I/O#0 element every value above should be configured separately. For example: I/O#0 element by SMS, SMS should look like:
“ setparam 50080:2” (“ setparam 50080:<ExternalVoltageIO_priority>”). This command will set External Voltage IO priority to priority to High.

Other I/O property elements can be configured in the same logic. All I/O element parameters are listed below.

6.4.18LVCAN

LVCAN elements can be configured in same way like with normal I/O elements. LVCAN IO elements can also be configured remotely via SMS command.

Table 18 LVCAN elements and parameters

Element name (default SMS Event Text)	ID
[LVC Vehicle Speed]	45100
[LVC Acceleration Pedal Position]	45110
[LVC Fuel Consumed]	45120
[LVC Fuel Level Liters]	45130
[LVC Engine RPM]	45140
[LVC Total Mileage]	45150
[LVC Fuel Level Percent]	45160
[LVC Door Status]	45170
[LVC Program Number]	45180
[LVC ModuleID]	45190
[LVC Engine Work Time]	45200
[LVC Engine Work Time (counted)]	45210
[LVC Total Mileage (counted)]	45220
[LVC Fuel Consumed (counted)]	45230
[LVC Fuel Rate]	45240
[LVC AdBlue Level (percent)]	45250
[LVC AdBlue Level (liters)]	45260
[LVC Engine Load]	45270
[LVC Engine Temperature]	45280
[LVC Axle 1 Load]	45290
[LVC Axle 2 Load]	45300

[LVC Axle 3 Load]	45310
[LVC Axle 4 Load]	45320
[LVC Axle 5 Load]	45330
[LVC Control State Flags]	45340
[LVC Agricultural Machinery Flags]	45350
[LVC Harvesting Time]	45360
[LVC Area of Harvest]	45370
[LVC Mowing Efficiency]	45380
[LVC Grain Mown Volume]	45390
[LVC Grain Moisture]	45400
[LVC Harvesting Drum RPM]	45410
[LVC Gap Under Harvesting Drum]	45420
[LVC Security State Flags]	45430
[LVC Tacho Total Vehicle Distance]	45440
[LVC Trip Distance]	45450
[LVC Tacho Vehicle Speed]	45460
[LVC Tacho Driver Card Presence]	45470
[LVC Driver1 States]	45480
[LVC Driver2 States]	45490
[LVC Driver1 Continuous Driving Time]	45500
[LVC Driver2 Continuous Driving Time]	45510
[LVC Driver1 Cumulative Break Time]	45520
[LVC Driver2 Cumulative Break Time]	45530
[LVC Driver1 Duration Of Selected Activity]	45540
[LVC Driver2 Duration Of Selected Activity]	45550
[LVC Driver1 Cumulative Driving Time]	45560
[LVC Driver2 Cumulative Driving Time]	45570
[LVC Driver1 ID High]	45580
[LVC Driver1 ID Low]	45590
[LVC Driver2 ID High]	45600
[LVC Driver2 ID Low]	45610
[LVC Battery Temperature]	45620
[LVC Battery Level (percent)]	45630
[DTC Faults]	45640
[CNG Status]	45890
[CNG Used]	45900
[CNG Level]	45910
[DTC Codes]	45930
Example:	‘setparam 45102:5’ - This command will set LVCAN Vehicle Speed High Level parameter to 5

6.4.19 FMS IO

FMS, or Fleet Management Systems Interface, is a sector to configure and manage events based on vehicle data of commercial vehicles. Vehicle data comes through CAN lines.

Event configuring isn’t different from those in LVCAN and I/O sectors. The only difference is IDs.

Table 19 FMS IO ID list

Category name	Par Nr in P:FMS:	Par No. In P:FMSDAT:	(signal) name	Size (Bytes)	Param IO ID	Value range
65265 – Cruise Control/Vehicle Speed	1	1	Brake switch	1	70500	0-1 0 = pedal released 1 = pedal depressed
	2	2	wheel based speed	4	70510	0-65536 (km/h)*
	3	3	cruise control active	1	70520	0-1 0 = switched off 1 = switched on
	4	4	clutch switch	1	70530	0-1 0 = pedal released 1 = pedal depressed
	5	5	PTO state	1	70540	0-3 0 = off/disabled 1 = Set 2 = not available
61443 – Electronic Engine Controller #2	6	6	accelerator pedal position 1	4	70550	0-102 (%)*
	7	7	Engine Percent Load At Current Speed	1	70560	0-125 (%)*
65257 – Fuel Consumption	8	8	Engine total fuel used	4	70570	0 – 2105540607,5 (Liters)*
65276 – Dash Display	9	9	fuel level 1 X	4	70580	1-100 (%)*
61444 – Electronic Engine Controller #1	10	10	engine speed X	4	70590	0 – 8031,875 (rpm)*
65258 – Vehicle Weight **	[11-25] (Tire No 1 - 15)	11	Axle location	1		1-15
			Tire location	1		1-15
			Axle weight	4	[70600 – 70740] (each 10 IDs)	32766 (kg)*
65253 – Engine Hours, Revolutions: HOURS	26	12	Engine total hours of Operation X	4	70750	0 – 214748364 (Hours)*
65260 – Vehicle Identification	27	13	vehicle identification number X	Max 24	70760	Max 24 ASCII bytes
64977 – FMS Standard interface	28	14	SW-version supported X	4	70770	4 ASCII bytes (Version format – ab.cd)
	29	15	Diagnostics supported X	1	70780	0-3 0 = diagnostics is not supported 1 = diagnostics is supported 2 = reserved 3 = don´t care
	30	16	Requests supported X	1	70790	0-3 0 = request is not supported 1= request is supported 2 = reserved 3 = don´t care
65217 - High Resolution Vehicle Distance	31	17	High resolution total vehicle distance X	4	70800	0 - 21055406 km*

Category name	Par Nr in P:FMS:	Par No. In P:FMSDAT:	(signal) name	Size (Bytes)	Param IO ID	Value range
65216 - Service Information	32	18	Service distance	4	70810	-160 635 – 167040 km*
65132 - Tachograph	33	19	Vehicle motion X	1	70820	0 – Motion Not Detected 1 – Motion Detected
	34	20	driver 2 working state X	1	70840	0 – Rest 1 – Driver Available 2 – Work 3 - Drive 4 – Error 5 – not available
	35	21	driver 1 working state X	1	70830	0 – Rest 1 – Driver Available 2 – Work 3 - Drive 4 – Error 5 – not available
	36	22	Vehicle overspeed	1	70850	0 – No Overspeed 1 – Overspeed
	37	23	Driver 1 time rel. states	1	70860	0 – Normal 1 – 15min bef. 4,5h 2 – 4,5h reached 3 – 15min bef. 9h 4 – 9h reached 5 – 15min bef. 16h 6 – 16h reached 7 – Error 8 – not available
	38	24	Driver 2 time rel. states	1	70870	0 – Normal 1 – 15min bef. 4,5h 2 – 4,5h reached 3 – 15min bef. 9h 4 – 9h reached 5 – 15min bef. 16h 6 – 16h reached 7 – Error 8 – not available
65132 - Tachograph	39	25	Driver 1 card X	1	70880	0 – Card Not Present 1 – Card Present
	40	26	Driver 2 card X	1	70890	0 – Card Not Present 1 – Card Present
	41	27	Direction indicator	1	70900	0 – Forward 1 – Reverse
	42	28	Tachograph performance X	1	70910	0 – Normal Performance 1 – Performance Analysis
	43	29	Handling information X	1	70920	0 – No Handling Information 1 – Handling Information
	44	30	System event X	1	70930	0 – No Tacho Event 1 – Tacho Event
	45	31	Tachograph vehicle speed X	2	70940	[0 – 65000] – Tacho Vehicle Speed km/h*
65262 - Engine Coolant Temperature 1	46	32	engine coolant temperature X	1	70950	[-40 – 210] oC– Engine Coolant Temperature*
65269 - Ambient Conditions	47	33	Ambient Air Temperature X	2	70960	[-273 – 1770]oC – Ambient Air Temperature*
65131 - Driver's Identification	48	34	Driver 1 Identification	32	70970	24 ASCII Bytes per Driver ID
65131 - Driver's Identification	49		Driver 2 Identification X	32	70980	24 ASCII Bytes per Driver ID

Category name	Par Nr in P:FMS:	Par No. In P:FMSDAT:	(signal) name	Size (Bytes)	Param IO ID	Value range
65266 – Fuel Economy	50	35	Fuel rate X	4	70990	[0 – 3212,75] litres/h*
	51	36	Instantaneous Fuel Economy X	4	71000	[0 – 125.5 km/litre]*
64932 - PTO Drive Engagement	52	37	At least one PTO engaged	1	71010	0 – No PTO Drive is Engaged 1 – At least one PTO drive is engaged 2 – Error 3 – not available
64777 - High Resolution Fuel Consumption (Liquid)	53	38	High resolution engine total fuel used	4	71020	[0 - 4211081,215] mili litres*
Combined vehicle weight	54	39	Combined vehicle weight		71030	

Brake switch:

Switch signal which indicates that the driver operated brake foot pedal is being pressed. This brake foot pedal is controlling the vehicles' service brake (total vehicle braking application, not park brakes). It is necessary for safe drivetrain behavior that the switch activates before the physical braking components are activated (i.e. Disengage the cruise control function prior to the activation of friction brakes).

00 – Brake pedal released
01 – Brake pedal pressed
10 – Error
11 – Not Available
Data Length: 2 bits
Resolution: 4 states/2 bit, 0 offset
Data Range: 0 to 3 Operational Range: same as data range
Type: Measured
Supporting information:
PGN 65265
Note: Firmware captures only [0,1] values. [2,3] – are ignored.

Wheel based speed:

Speed of the vehicle as calculated from wheel or tailshaft speed.
Data Length: 2 bytes
Resolution: 1/256 km/h per bit, 0 offset
Data Range: 0 to 250.996 km/h Operational Range: same as data range
Type: Measured
Supporting information:
PGN 65265
Note: Firmware sends data as U32, so value after floating point is ignored. Also value sent to server is already adjusted with bitgain.

Cruise control active:

Cruise control is switched on. It is not ensured that the engine is controlled by cruise control, as in the case of a large driver's demand the engine is controlled by the driver while cruise control is active(maximum selection of cruise control and driver's demand). The cruise control is set to 0 if a switch off condition occurs.

00 – Cruise control switched off
01 – Cruise control switched on
10 – Error
11 – Not available
Data Length: 2 bits
Resolution: 4 states/2 bit, 0 offset
Data Range: 0 to 3 Operational Range: same as data range
Type: Measured
Supporting information:
PGN 65265
Note: Firmware captures only [0,1] values. [2,3] – are ignored.

Clutch switch:
Switch signal which indicates that the clutch pedal is being pressed. It is necessary for a safe drivetrain behavior that the clutch switch is set before the clutch is opened (cruise control function).
00 – Clutch pedal released
01 – Clutch pedal pressed
10 – Error
11 – Not available
Data Length: 2 bits
Resolution: 4 states/2 bit, 0 offset
Data Range: 0 to 3 Operational Range: same as data range
Type: Measured
Supporting information:
PGN 65265
Note: Firmware captures only [0, 1] values. [2, 3] – are ignored.
PTO state information:
This parameter is used to indicate the current state or mode of operation by the power takeoff (PTO) governor. In lieu of support for PTO Drive Engagement parameters, this parameter may represent the status of a PTO drive. The broadcasting device must ensure that each achieved state is conveyed in at least one message broadcast before a transition to another state is allowed.
00000 Off/Disabled
00001 Hold
00010 Remote Hold
00011 Standby
00100 Remote Standby
00101 Set
00110 Decelerate/Coast
00111 Resume
01000 Accelerate
01001 Accelerator Override
01010 Preprogrammed set speed 1
01011 Preprogrammed set speed 2
01100 Preprogrammed set speed 3
01101 Preprogrammed set speed 4
01110 Preprogrammed set speed 5

01111 Preprogrammed set speed 6
10000 Preprogrammed set speed 7
10001 Preprogrammed set speed 8
10010 PTO set speed memory 1
10011 PTO set speed memory 2
10100-11110 not defined
11111 Not available
Off/Disabled 00000b — Used to indicate that the PTO governor enable switch is in the off position.
Hold 00001b — used to indicate that the PTO governor is active and currently maintaining a captured operating speed.
Remote Hold 00010b — used to indicate that the remote PTO governor is active and the PTO governor is currently maintaining a captured operating speed.
Standby 00011b — used to indicate that the PTO governor device enable switch is in the ON position and it is possible to manage the PTO governor.
Remote Standby 00100b — used to indicate that the remote PTO governor device enable switch is in the ON position and it is possible to manage the PTO governor.

Set 00101b — Used to indicate that the PTO governor is establishing current speed as the operating speed (captured value).
Decelerate/Coast 00110b — Used to indicate that the PTO governor is in the process of ramping down, or coasting, from the current operating speed.
Resume 00111b — Used to indicate that the PTO governor is in the process of resuming the operating speed to a previously captured value.
Accelerate 01000b — Used to indicate that the PTO governor is in the process of ramping up the operating speed.
Accelerator Override 01001b—used to indicate that the PTO governor is active but for the present time the engine is controlled by a large driver's demand.
Preprogrammed PTO Governor Set Speed 1 01010b—used to indicate that the PTO device is establishing a first preprogrammed PTO governor set speed (user programmable) as the current operating speed.
Preprogrammed PTO Governor Set Speed 2 01011b—used to indicate that the PTO device is establishing a second preprogrammed PTO governor set speed (user programmable) as the current operating speed.
Preprogrammed PTO Governor Set Speed 3 01100b —used to indicate that the remote PTO device is establishing a third preprogrammed PTO governor set speed (user programmable) as the current operating speed.
Preprogrammed PTO Governor Set Speed 4 01101b —used to indicate that the remote PTO device is establishing a fourth preprogrammed PTO governor set speed (user programmable) as the current operating speed.
Preprogrammed PTO Governor Set Speed 5 01110b —used to indicate that the remote PTO device is establishing a fifth preprogrammed PTO governor set speed (user programmable) as the current operating speed.
Preprogrammed PTO Governor Set Speed 6 01111b—used to indicate that the remote PTO device is establishing a sixth preprogrammed PTO governor set speed (user programmable) as the current operating speed.

Preprogrammed PTO Governor Set Speed 7 10000b —used to indicate that the remote PTO device is establishing a seventh preprogrammed PTO governor set speed (user programmable) as the current operating speed.
Preprogrammed PTO Governor Set Speed 8 10001b —used to indicate that the remote PTO device is establishing a eighth preprogrammed PTO governor set speed (user programmable) as the current operating speed.
PTO set speed memory 1 10010b —Used to indicate that PTO set speed memory one set state is active.
PTO set speed memory 2 10011b — Used to indicate that PTO set speed memory two set state is active.
Data Length: 5 bits
Resolution: 32 states/5 bit, 0 offset
Data Range: 0 to 31 Operational Range: same as data range
Type: Status
Supporting information:
PGN 65265
Note: Firmware captures full data range [0x00..0x1F]. All states.

Accelerator pedal position 1:
The ratio of actual position of the analog engine speed/torque request input device (such as an accelerator pedal or throttle lever) to the maximum position of the input device. This parameter is intended for the primary accelerator control in an application. If an application has only one accelerator control, use SPN 91.
For on-highway vehicles, this will typically be the operator's accelerator pedal. Although it is used as an input to determine powertrain demand, it also provides anticipatory information to transmission and ASR algorithms about driver actions.
In marine applications, this will typically be the operator's throttle lever.
If a low idle validation switch is used in conjunction with accelerator pedal position 1, use Accelerator Pedal Low Idle Switch 1, SPN 558.
Data Length: 1 byte
Resolution: 0.4 %/bit, 0 offset
Data Range: 0 to 100 % Operational Range: same as data range
Type: Measured
Supporting information:
PGN 61443
Note: Firmware sends data as U32 (although it would be enough to send as 1B), so value after floating point is ignored. Also value sent to server is already adjusted with bitgain.

Engine percent load at current speed:
The ratio of actual engine percent torque (indicated) to maximum indicated torque available at the current engine speed, clipped to zero torque during engine braking.
Data Length: 1 byte
Resolution: 1 %/bit, 0 offset
Data Range: 0 to 250 % Operational Range: 0 to 125%
Type: Status
Supporting information:
PGN 61443

Note: Since bitgain is 1%/bit – raw data is sent to server. But, data is limited to max 125 (0x7D). If captured data is higher than 125 (decimal) – data is truncated to 125.

Engine total fuel used:
Accumulated amount of fuel used during vehicle operation.
Data Length: 4 bytes
Resolution: 0.5 L/bit, 0 offset
Data Range: 0 to 2,105,540,607.5 L Operational Range: same as data range
Type: Measured
Supporting information:
PGN 65257
Note: Value sent to server is already adjusted with bitgain. Since data is sent as U32, value after floating point is ignored.

Fuel level 1:
Ratio of volume of fuel to the total volume of fuel storage container.
When Fuel Level 2 (SPN 38) is not used, Fuel Level 1 represents the total fuel in all fuel storage containers. When Fuel
Level 2 is used; Fuel Level 1 represents the fuel level in the primary or left-side fuel storage container.
Data Length: 1 byte
Resolution: 0.4 %/bit, 0 offset
Data Range: 0 to 100 % Operational Range: same as data range
Type: Measured
Supporting information:
PGN 65276
Note: Value sent to server is already adjusted with bitgain. Since data is sent as U32, value after floating point is ignored.

Engine speed:
Actual engine speed which is calculated over a minimum crankshaft angle of 720 degrees divided by the number of cylinders.
Data Length: 2 bytes
Resolution: 0.125 rpm/bit, 0 offset
Data Range: 0 to 8,031.875 rpm Operational Range: same as data range
Type: Measured
Supporting information:
PGN 61444
Note: Value sent to server is already adjusted with bitgain. Since data as sent as U32, value after floating point is ignored.

Axle weight:
Total mass imposed by the tires on the road surface at the specified axle.
Data Length: 2 bytes
Resolution: 0.5 kg/bit, 0 offset
Data Range: 0 to 32,127.5 kg Operational Range: same as data range
Type: Measured
Supporting information:

PGN 65258
Note: Value sent to server is already adjusted with bitgain. Data sent to server is a sum of all weights per tire per specific axle [1-15]. I.e. axle[1].total_weight, axle[2].total_weight etc. Since data is sent as U32, value after floating point is ignored.

Engine total hours of operation:
Accumulated time of operation of engine.
Data Length: 4 bytes
Resolution: 0.05 hour/bit, 0 offset
Data Range: 0 to 210,554,060.75 hour. Operational Range: same as data range
Type: Measured
Supporting information:
PGN 65253
Note: Value sent to server is already adjusted with bitgain. Since data as sent as U32, value after floating point is ignored.

Vehicle identification number:
Vehicle Identification Number (VIN) as assigned by the vehicle manufacturer.
NOTE The ASCII character "*" is reserved as a delimiter.
Data Length: Variable – up to 200 characters ("*" delimited)
Resolution: ASCII, 0 offset
Data Range: 0 to 255 per byte Operational Range: same as data range
Type: Measured
Supporting information:
PGN 65260
Note: Firmware expects VIN to fit into 24 bytes. According to captured VIN length either 1/2/3 IO ID's will be sent to server (8 Bytes each). I.e. if VIN length <= 8, only one IO ID (105) will be sent to server, if VIN length >9 and <= 16, then two IO ID's will be sent to server (105,106), and if VIN length > 16 and <= 24 then three IO ID's will be sent to server (105,106,107).

FMS-standard SW version supported:
Information that identifies which issue level of the FMS-standard document the software included in the FMS gateway
supports. Four bytes, representing xx.yy type revision level identification.
Information to be ASCII equivalent of the numeric revision level of the FMS document, 00.01 to 99.99. The first released version will be 01.00.
Note:
Byte 2 and byte 3 represents the SW version supported for trucks. Version number in the format ab.cd where Byte 2 represents "a" ASCII and Byte 3 represents "b" ASCII.
Byte 4 and byte 5 represents the SW version supported for bus and coaches; version number in the format ab.cd where
Byte 4 represents "c" ASCII and Byte 5 represents "d" ASCII.
Data Length: 4 bytes
Resolution: ASCII, 0 offset
Data Range: 0 to 255 per byte Operational Range: same as data range
Type: Measured
Supporting information:
PGN 64977

Note: Firmware sends 4 bytes, which should be interpreted as xx.yy.

FMS-standard diagnostics supported:
Status signal which indicates if the FMS Vehicle Interface (FMS Gateway) supports the handling of diagnostic messages from the vehicle network onto the FMS network.
The FMS gateway does NOT support the re-broadcast of diagnostics messages present on the vehicle network.
If this 'FMS-standard Diagnostics Supported' feature is supported by the FMS Gateway, the FMS Gateway will support the requests for diagnostics information (from the FMS device) onto the vehicle network and pass the responses onto the FMS network.
Note: This feature of the FMS Gateway is independent of the 'FMS-standard Requests Supported'. The FMS Gateway may support diagnostics without supporting the 'FMS-standard Requests Supported' function, or visa-versa.

00 Diagnostics Is Not Supported
01 Diagnostics Is Supported
10 Reserved
11 Don't care
Data Length: 2 bits
Resolution: 4 states/2 bit, 0 offset
Data Range: 0 to 3 Operational Range: same as data range
Type: Status
Supporting information:
PGN 64977

Note: Firmware captures all values [0x00-0x03].

FMS-standard requests supported:
Status signal which indicates if the FMS Vehicle Interface (FMS Gateway) will respond to requests from the FMS device for the PGNs listed in the FMS Interface Specification.
This mode is to support FMS gateway devices that only operate in a 'Request' mode.
The FMS PGNs may also be broadcast periodically in this mode.
The FMS Gateway will NOT support the requests for information not included in the FMS Interface Specification onto the vehicle network."
00 On request mode is not supported
01 On request mode is supported
10 Reserved
11 Don't care
Data Length: 2 bits
Resolution: 4 states/2 bit, 0 offset
Data Range: 0 to 3 Operational Range: same as data range
Type: Status
Supporting information:
PGN 64977
Note: Firmware captures all values [0x00-0x03].

High resolution total vehicle distance:
Accumulated distance traveled by the vehicle during its operation.

NOTE – See SPN 245 for alternate resolution.
Data Length: 4 bytes
Resolution: 5 m/bit, 0 offset
Data Range: 0 to 21,055,406 km Operational Range: same as data range
Type: Measured
Supporting information:
PGN 65217
Note: Value sent to server is already adjusted with bitgain.

Service distance:
The distance which can be traveled by the vehicle before the next service inspection is required. A negative distance is transmitted if the service inspection has been passed. The component that requires service is identified by the service component identification (see SPN 911-913, 1379, and 1584).
Data Length: 2 bytes
Resolution: 5 km/bit, -160,635 km offset
Data Range: -160,635 to 160,640 km Operational Range: same as data range
Type: Measured
Supporting information:
PGN 65216
Note: Value sent to server is already adjusted with bitgain.

Vehicle motion:
Indicates whether motion of the vehicle is detected or not.
00 Vehicle motion not detected
01 Vehicle motion detected
10 – Error
11 – Not available
Data Length: 2 bits
Resolution: 4 states/2 bit, 0 offset
Data Range: 0 to 3 Operational Range: same as data range
Type: Measured
Supporting information:
PGN 65132
Note: Firmware captures all values [0x00-0x03].

Driver 1/2 working state:
State of work of the driver.
000 Rest – sleeping
001 Driver available – short break
010 Work – loading, unloading, working in an office
011 Drive – behind wheel
100-101 Reserved
110 Error
111 Not available
Data Length: 3 bits
Resolution: 8 states/3 bit, 0 offset
Data Range: 0 to 7 Operational Range: same as data range

Type: Status
Supporting information:
PGN 65132
Note: Firmware captures all values [0x00-0x07].

Vehicle overspeed:
Indicates whether the vehicle is exceeding the legal speed limit set in the tachograph.
00 No overspeed
01 Overspeed
10 Error
11 Not available
Data Length: 2 bits
Resolution: 4 states/2 bit, 0 offset
Data Range: 0 to 3 Operational Range: same as data range
Type: Measured
Supporting information:
PGN 65132
Note: Firmware captures all values [0x00-0x03].

Driver 1/2 time related states:
Indicates if the driver approaches or exceeds working time limits (or other limits).
0000 Normal/No limits reached
0001 Limit #1 – 15 min before 4 ½ h
0010 Limit #2 – 4 ½ h reached
0011 Limit #3 – 15 min before 9 h
0100 Limit #4 – 9 h reached
0101 Limit #5 – 15 min before 16 h (not having 8h rest during the last 24h)
0110 Limit #6 – 16 h reached
0111-1100 Reserved
1101 Other
1110 Error
1111 Not available
Data Length: 4 bits
Resolution: 16 states/4 bit, 0 offset
Data Range: 0 to 15 Operational Range: same as data range
Type: Measured
Supporting information:
PGN 65132
Note: Firmware captures all values [0x00-0x0F].

Driver card, driver 1/2:
Indicates the presence of a driver card
00 – Driver card not present
01 – Driver card present
10 – Error
11 – Not available
Data Length: 2 bits
Resolution: 4 states/2 bit, 0 offset

Data Range: 0 to 3 Operational Range: same as data range
Type: Measured
Supporting information:
PGN 65132
Note: Firmware captures all values [0x00-0x03].

Direction indicator:
Indicates the direction of the vehicle.
00 – Forward
01 – Reverse
10 – Error
11 – Not available
Data Length: 2 bits
Resolution: 4 states/2 bit, 0 offset
Data Range: 0 to 3 Operational Range: same as data range
Type: Measured
Supporting information:
PGN 65132
Note: Firmware captures all values [0x00-0x03].

Tachograph performance:
Indicates the tachograph performance; including electronic or mechanical analysis, instrument analysis, speed sensor analysis, mass storage analysis, and printer analysis.
00 – Normal performance
01 – Performance analysis
10 – Error
11 – Not available
Data Length: 2 bits
Resolution: 4 states/2 bit, 0 offset
Data Range: 0 to 3 Operational Range: same as data range
Type: Status
Supporting information:
PGN 65132
Note: Firmware captures all values [0x00-0x03].

Handling information:
Indicates that handling information is present. Information could include “no printer paper”, “no driver card”, etc.
00 – No handling information
01 – Handling information
10 – Error
11 – Not available
Data Length: 2 bits
Resolution: 4 states/2 bit, 0 offset
Data Range: 0 to 3 Operational Range: same as data range
Type: Status
Supporting information:
PGN 65132

Note: Firmware captures all values [0x00-0x03].

System event:
Indicates that a tachograph event has occurred. This may include power supply interruption, interruption of the speed sensor, incorrect data on the driver card, driving without a driver card, illegal removal of a driver card, insertion of a driver card during driving, and time adjustment.
00 – No tachograph event
01 – Tachograph event
10 – Error
11 – Not available
Data Length: 2 bits
Resolution: 4 states/2 bit, 0 offset
Data Range: 0 to 3 Operational Range: same as data range
Type: Status
Supporting information:
PGN 65132
Note: Firmware captures all values [0x00-0x03].

Tachograph vehicle speed:
Speed of the vehicle registered by the tachograph.
Data Length: 2 bytes
Resolution: 1/256 km/h per bit, 0 offset
Data Range: 0 to 250.996 km/h Operational Range: same as data range
Type: Measured
Supporting information:
PGN 65132
Note: Since FM FW sends this parameter as U16 (2 Bytes), value after floating point is discarded. So data limit becomes [0-250]. This parameter could be send as 1Byte IO (as [0-250] fits into 1B, but it is sent as 2B).
Firmware sends value which is already adjusted with bitgain.

Engine coolant temperature:
Temperature of liquid found in engine cooling system.
Data Length: 1 byte
Resolution: 1 deg C/bit, -40 deg C offset
Data Range: -40 to 210 deg C Operational Range: same as data range
Note: This parameter is to be interpreted as either a uint8_t or a int8_t, depending on the binary value. Values from 0x00 up to and including 0xD2 are of the type uint8_t (unsigned integer). Values from 0xD3 up to and including 0xFF are of the type int8_t (signed integer, two's complement). The value sent to the server has already been adjusted for the bitgain and offset.

Ambient air temperature:
Temperature of air surrounding vehicle.
Data Length: 2 bytes
Resolution: 0.03125 deg C/bit, -273 deg C offset
Data Range: -273 to 1735 deg C Operational Range: same as data range
Type: Measured
Supporting information:

PGN 65269
Note: Firmware sends value which is already adjusted with bitgain.

Driver 1/2 identification:
Used to obtain the driver identity.
Data Length: Variable ("*" delimited)
Resolution: ASCII, 0 offset
Data Range: 0 to 255 per byte Operational Range: same as data range
Type: Measured
Supporting information:
PGN 65131
Note: Firmware expects driver identification to fit into 24 bytes. According to captured driver ID length either 1/2/3 IO ID's will be sent to server (8 Bytes each). I.e. if driver ID length <= 8, only one IO ID (129) will be sent to server, if VIN length >9 and <= 16, then two IO ID's will be sent to server (129,130), and if driver ID length > 16 and <= 24 then three IO ID's will be sent to server (129,130,131).

Engine fuel rate:
Amount of fuel consumed by engine per unit of time.
Data Length: 2 bytes
Resolution: 0.05 L/h per bit, 0 offset
Data Range: 0 to 3,212.75 L/h Operational Range: same as data range
Type: Measured
Supporting information:
PGN 65266
Note: Since FW sends this parameter as U32, value after floating point is discarded. Data limit becomes [0-3,212]. Firmware sends value which is already adjusted with bitgain.

Engine instantaneous fuel economy:
Current fuel economy at current vehicle velocity.
Data Length: 2 bytes
Resolution: 1/512 km/L per bit, 0 offset
Data Range: 0 to 125.5 km/L Operational Range: same as data range
Type: Measured
Supporting information:
PGN 65266
Note: FW sends this parameter as U32, value after floating point is discarded. Data limit becomes [0-125]. This could have been 1 B IO element, but it is 4 B. Firmware sends value which is already adjusted with bitgain.

At least one PTO engaged:
Indicates that at least one PTO is engaged
00 No PTO drive is engaged
01 At least one PTO drive is engaged
10 Error
11 Not available

Note: This parameter should only be sent by the controller that has knowledge of all PTO drives on the vehicle (e.g, the FMS gateway). Individual PTO drive controllers should broadcast this parameter as “not available”.
Data Length: 2 bits
Resolution: 4 states/2 bit, 0 offset
Data Range: 0 to 3 Operational Range: same as data range
Type: Status
Supporting information:
PGN 64932
Note: Firmware captures all values [0x00-0x03].

High resolution engine total fuel used:
Note: Firmware sends value in mililiters without any conversion.

6.4.20 Tachograph serial data

Tachograph serial data can be taken from Tachograph via K-Line. Data here is constantly refreshed. As the other elements’ windows, this one also has all the options to configure event generating.

Table 20 Tachograph serial data elements and parameters

Name	Parameter Name	Configuration ID	Available Values
KLINE Driver Recognize	Priority	X050	0 – disable 1 – low 2 – high
	High level		N/A
	Low level		N/A
	Generate event		3 – Monitoring 5 – On change
KLINE Driver 1 working state	Priority	70080	0 – disable 1 – low 2 – high
	High level		N/A
	Low level		N/A
	Generate event		3 – Monitoring 5 – On change
KLINE Driver 2 working state	Priority	70090	0 – disable 1 – low 2 – high
	High level		N/A
	Low level		N/A
	Generate event		3 – Monitoring 5 – On change

Name	Parameter Name	Configuration ID	Available Values
KLINE Overspeeding	Priority	70020	0 – disable 1 - low 1 – high
	High level		N/A
	Low level		N/A
	Generate event		3 – Monitoring 5 – On change
KLINE Driver 1 card	Priority	70100	0 – disable 1 – low 2 – high
	High level		N/A
	Low level		N/A
	Generate event		3 – Monitoring 5 – On change
KLINE Driver 2 card	Priority	70110	0 – disable 1 – low 2 – high
	High level		N/A
	Low level		N/A
	Generate event		3 – Monitoring 5 – On change
KLINE Driver 1 rel time states	Priority	70120	0 - disable 1 – low 2 – high
	High level		N/A
	Low level		N/A
	Generate event		3 – Monitoring 5 – On change
KLINE Driver 2 rel time states	Priority	70130	0 – disable 1 – low 2 – high
	High level		N/A
	Low level		N/A
	Generate event		3 – Monitoring 5 – On change
KLINE Vehicle speed	Priority	70030	0 – disable 1 – low 2 – high
	High level		0 – 255 km/h
	Low level		0 – 255 km/h
	Generate event		0 – On range exit 1 – On range entrance 2 – On both 3 – Monitoring

Name	Parameter Name	Configuration ID	Available Values
			4 – Hysteresis 5 – On change
KLINE Odometer	Priority	70040	0 – disable 1 – low 2 – high
	High level		N/A
	Low level		N/A
	Generate event		3 – Monitoring 5 – On change
KLINE Distance	Priority	70050	0 – disable 1 – low 2 – high
	High level		N/A
	Low level		N/A
	Generate event		3 – Monitoring 5 – On change
KLINE Tacho Timestamp	-	70000	-
KLINE Driver 1 ID	Priority	70140	0 – disable 1 – low 2 – high
	High level		N/A
	Low level		N/A
	Generate event		3 – Monitoring 5 – On change
KLINE Driver 2 ID	Priority	70150	0 – disable 1 – low 2 – high
	High level		N/A
	Low level		N/A
	Generate event		3 –Monitoring 5 – On change
KLINE Vehicle Identification Number	Priority	70060	0 – disable 1 – low 2 – high
	High level		N/A
	Low level		N/A
	Generate event		3 –Monitoring 5 – On change
KLINE Vehicle Registration Number	Priority	70070	0 – disable 1 – low 2 – high
	High level		N/A
	Low level		N/A
	Generate event		3 –Monitoring 5 – On change

Name	Parameter Name	Configuration ID	Available Values
KLINE Card 1 issuing number state	Priority	70160	0 – disable 1 – low 2 – high
	High level		N/A
	Low level		N/A
	Generate event		3 –Monitoring 5 – On change
KLINE Card 2 issuing number state	Priority	70170	0 – disable 1 – low 2 – high
	High level		N/A
	Low level		N/A
	Generate event		3 –Monitoring 5 – On change

To configure any K-Line parameter, every parameter should be separated with comma.
For example, configuring Kline Driver 2 ID by SMS, SMS should look like**:**
“ setparam 70140:1” (“ setparam 70140:<elementID>”)
Other Kline properties can be configured in the same logic.

6.4.21 RS232 \ RS485

User can connect various devices with FMB640. This window is used to configure working modes on RS232 and RS485 interfaces.

6.4.21.1 RS485

The modes are described below and can be set in the configuration window.

Silent Mode

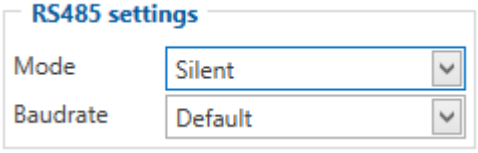

Figure 51 Silent Mode

RS485 Works in receive mode. Support debug and testing commands. When command is received answer is sent after that it back up to Receive mode.

Log Mode

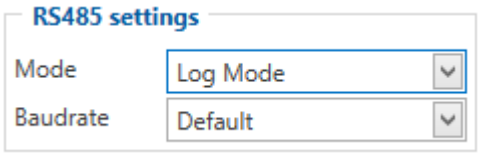

Figure 52 FM Log Mode

RS485 works in transmit mode, it prints FM log. It won't respond to commands.

NMEA Mode

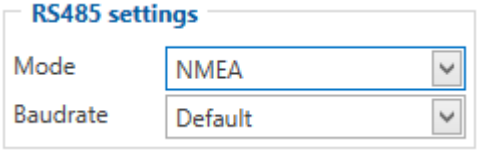

Figure 53 NMEA Log Mode

RS485 works in transmit mode, it prints NEMA. It won't respond to commands

LLS Mode

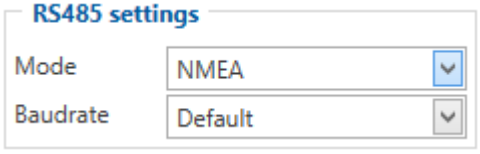

Figure 54 LLS Mode

The mode supports up to five LLS. Baud rate must be 19200. LLS have receiver id.

TCP Ascii

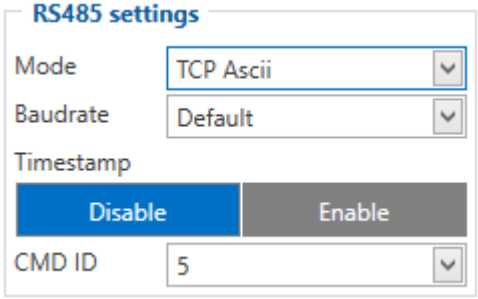

Figure 55 TCP Link Mode

RS485 works in receive mode. When data received from server RS485 is switched to transmit mode.

TCP binary

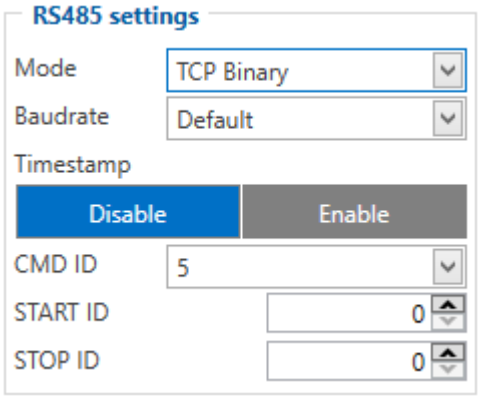

Figure 56 TCP link Mode binary

RS485 works in receive mode. When data received from server RS485 is switched to transmit mode.

TCP Ascii Buffered

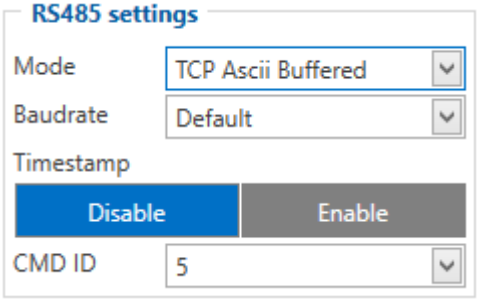

Figure 57 TCP Ascii Buffered

RS485 works in receive mode. When data received from server RS485 is switched to transmit mode. If data server is not available, data will be saved in buffer.

TCP Binary Buffered

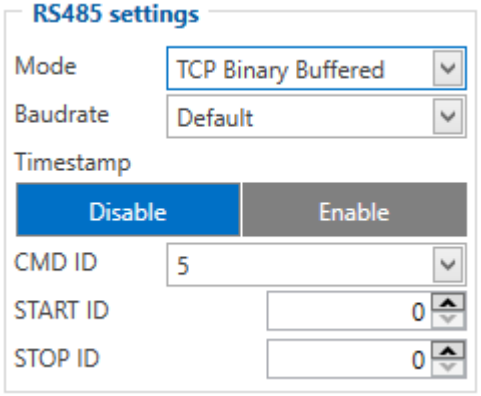

Figure 58 TCP Binary Buffered

RS485 works in receive mode. When data received from server RS485 is switched to transmit mode. If data server is not available, data will be saved in buffer.

6.4.21.2 RS232 COM1 and COM2 working modes

Silent Mode

FMB640 Works in receive mode. Support debug and testing commands. When command is received answer is sent after that it back up to Receive mode..

FM Log Mode

This is default mode of the FMB640. It is suitable for debugging.

NMEA Mode

In this mode NMEA logs are sent via COM ports.

LLS Mode

This mode is suitable for LLS sensors.

LLS Mode Configuration

1. RS232 \ RS485->COMX Settings->Baudrate = 19200
2. Globals->COMX Settings->Mode = LLS

Note: On Valid data Receive Status LED will blink.

LCD Mode Configuration

1.RS232 \ RS485->COMX Settings->Baudrate = 57600
2.RS232 \ RS485 ->COMX Settings->Mode = LCD

How to use:

* From Terminal need send command "WT^W your text here"
* From Hercules (server) Send "#DO DAT=you text here" (in special packet)

Notes:
#DO DAT= command prints only to COM2
Link between FM and server has to be established for this functionality to work
On Valid data Receive Status LED will blink.

RFID HID Mode Configuration

1.RS232 \ RS485 ->COMX Settings->Baudrate = 57600
2. RS232 \ RS485 ->COMX Settings->Mode = RFID

RFID MF7 Mode Configuration

1.RS232 \ RS485 ->COM2 Settings->Baudrate = 9600
2. RS232 \ RS485 ->COM2 Settings->Mode = RFID MF7

TCP Ascii

In this mode link with external device using text messages can be established.

Any string of data coming to COM will be routed to server. (if link is currently active) First message will be packet to special packet[5]. Packet will be sent as Codec12.

If you want to send message to COM, you need to pack in special packet.

1.RS232 \ RS485 ->COMX Settings->Baudrate = any of available baudrates
2. RS232 \ RS485 ->COMX Settings->Mode = TCP Link Mode
3. When sending a packet through COMX doesn't forget to enter a new line otherwise the packet will not be recognized. Packet format: <enter your message> <enter new line> - send. For example: *message/n* or in HEX it should look like: *6D 65 73 73 61 67 65 0D 0A*

When you send command to port X you assign Port A or port B as a recipient in your message unique ID.
Message comes to device with port number added by +1 for example if message is for port 9 device will understand as 10.

Ignores timesync, and records because these parameters are automaticaly configured when TCP Link mode is selected.

TCP Binary

This mode is the same as above but binary message doesn't need new line. Packet will be sent as Codec12. Packet format: <enter your message> - send. For example: *message* or in HEX it should look like: *6D 65 73 73 61 67 65*

1.RS232 \ RS485 ->COMX Settings->Baudrate = any of the available baudrates
2. RS232 \ RS485 ->COMX Settings->Mode = TCP Link Mode(Binary)

FMB640 supports buffering messages when there is no data link, messages will be saved to flash with a timestamp. Space reserved for buffering is 64 kB. By default buffering is disabled. To enable set "TimeStamp" property. Buffered messages will be sent using Codec13 protocol.

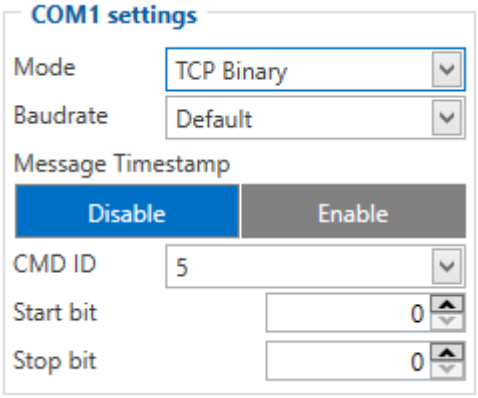

Figure 59 TCP link mode binary parameters

Note. There is a default timeout which is 30ms. When no packets are received for more than 30ms, it's seen as the end of the packet.

[5] For additional information of special packet, please contact to your local sales representative

TCP Ascii Buffered

Works like TCP Ascii but the difference is that it keeps data in temporary memory if data couldn't be sent to server.

TCP Binary Buffered

Works like TCP Binary but the difference is that it keeps data in temporary memory if data couldn't be sent to server.

Records to LCD mode
In this mode records are sent via ports.

ATOL Tachograph
This mode is used to connect ATOL tachograph.

UL202-2 Fuel Sensor
Select this mode to make Ultrasonic Fuel Sensors to work on COM port.

6.4.21.3 Garmin FMI

Garmin Settings

1. RS232 \ RS485 -> COM1/2 Settings->Baudrate = 9600
2. RS232 \ RS485 -> COM1/2 Settings->Mode = Garmin FMI

Ping Filter Enable Parameter:
0 - [DISABLED] = Ping packet will not blocked.
1 - [ENABLED] = Ping packet will be blocked.

Unicode Support Packet Enable Parameter:
0 - [DISABLED] = Unicode Packet will be send to server.
1 - [ENABLED] = Unicode Support Packet will not be send to server.

Firmware Configuration

Supported Garmin protocols: A***

(http://developer.garmin.com/lbs/fleet-management/fmi-protocol-support-matrix/)

Blocked Garmin ID's:

- Command 0A
- Date/Time Data 0E
- Unit ID/ESN 26
- Pvt Data 33
- Legacy Stop Message 87
- Legacy Text Message 88
- Ping 0260

- Ping response 0261
- Product ID Request 0001
- Product ID Data 0002

FM send ACK to these packets, ant these packets are not sent to server to reduce traffic.

Allowed Garmin ID's:

- ACK 06
- NAK 15
- Fleet Management Packet A1

Note: If packet are not listed here packet ID will be ignored.

6.4.22 CAN \ Tachograph

This window is dedicated to control CAN bus and Tachograph functionality.
User can turn on each of both 2 CAN lines and select proper CAN bus speed in kbps.

Tachograph Settings

DDD download source, where user can select which CAN line use to download DDD files from tachograph.

Tachograph Ignition Source, where user can select ignition source out of 5 options: Device ignition, DIN1, DIN2, DIN3 or DIN4.

WEB Tacho Settings

User can enable DDD files uploading to WEB Tacho server. In this case, server domain and port must be entered. Start delay parameter is a period of time which will have to pass after sending countdown is finished to start sending process.

FMS Settings

FMS data source parameter can be configured to define which CAN line will be used to get parameters of FMS IO elements.

7 DUAL SIM FUNCTIONALITY

FMB640 is able to operate in DUAL SIM switching mode to minimize the bill accounts for GSM/GPRS services. To use this mode, 2 SIM Operator list enumerated value must be chosen for

FMB640 can be used with one SIM. SIM1 card has higher priority than SIM2. For one SIM card using it must be placed in SIM1 slot for FMB640 to switch minimum times.

If SIM card is inserted into SIM 2 slot and 1 SIM operator list mode is used, FMB640 will work normally, but there will be more switching activities. In addition, APN settings in GPRS should be entered for SIM 1 and SIM 2 to avoid not sending records over GPRS.

SIM 1 and SIM 2 APN settings are set in the GPRS tab (Figure 601). Information about APN and authentication type should be provided by your GSM operator.

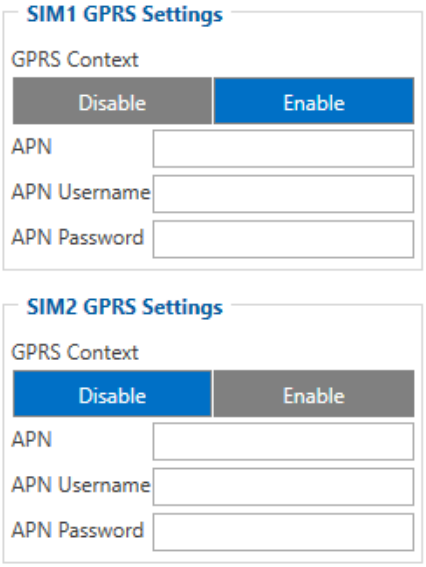

Figure 60 APN settings for SIM 1 and SIM 2

7.1.1 Dual SIM algorithm

Two SIM cards use algorithm is shown in the diagram (Figure 612).

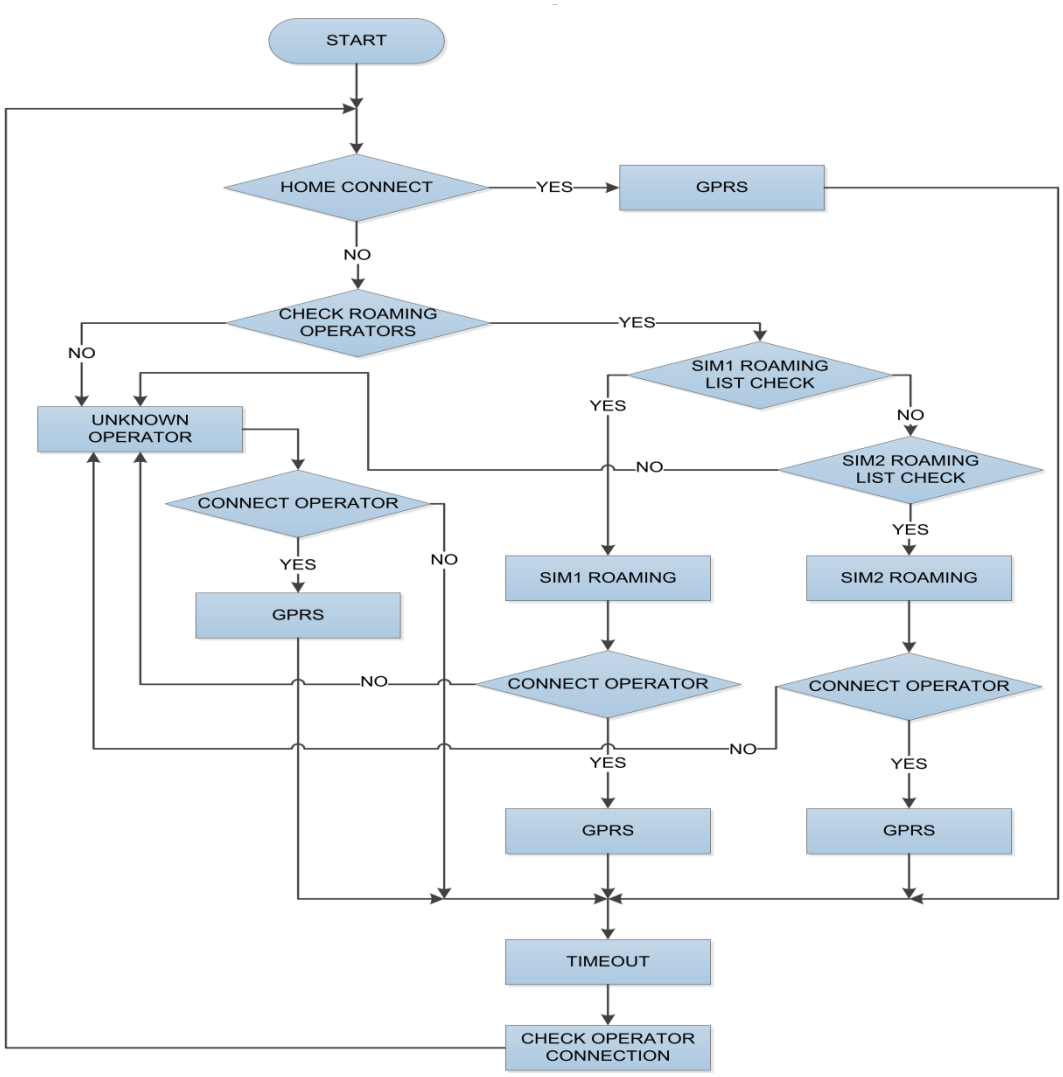

Figure 61 Dual SIM connection algorithm

8 SLEEP MODE

While in sleep mode, FMB640 sets GPS receiver to sleep mode but GSM/GPRS module stays active, in Sleep mode power usage can be decreased to save vehicle's battery, because GPS module is turned off.

FMB640 can enter sleep mode if **ALL** of these conditions are met:

- FMB640 has to be configured to work in Sleep mode;
- Start-up timeout has elapsed (5 minutes after every restart of the device);
- No movement by accelerometer is detected;
- Ignition is off;
- USB cable is not connected.

FMB640 exits sleep mode if **ONE** of the following conditions are true:

- Movement by accelerometer is detected (depends on accelerometer start settings);
- Ignition is turned on (driven logic high);
- USB cable is connected;

- HIGH or PANIC priority eventual record is detected;

While being in sleep mode FMB640:

- cannot save periodical or eventual records;
- send data to server;

9 DEEP SLEEP MODE

While in deep sleep mode, FMB640 sets GPS receiver to sleep mode and turns off GSM/GPRS module (it is not possible to wake up device via SMS), therefore records with last good coordinates are being saved and sent to AVL server if configured (GSM/GPRS module is turned on to send data and after turned off). Depending on two configurable parameters, send period and min period, in Deep Sleep mode power usage can be decreased to save vehicle's battery.

FMB640 can enter deep sleep mode (standby mode) if **ALL** of these conditions are met:

- FMB640 has to be configured to work in Deep Sleep mode;
- Start-up timeout has elapsed (5 minutes after every restart of the device);
- No movement by accelerometer is detected;
- Ignition is off;
- Send period is more than 60 seconds (Data Acquisition Mode settings);
- USB cable is not connected.

FMB640 exits deep sleep mode if **ONE** of the following conditions are true:

- Movement by accelerometer is detected (depends on accelerometer start settings);
- Ignition is turned on (driven logic high);
- USB cable is connected;
- HIGH or PANIC priority eventual record is detected;

While being in deep sleep mode FMB640:

- can save periodical or eventual records;
- send data to server;

Note: In order to save GPRS traffic records saved in deep sleep mode contain below listed I/O elements information:
Digital Inputs (1-4), Analog Inputs (1-4), Battery Voltage, Battery Current, Digital Outputs (1-4), External Voltage, Movement Sensor, Deep Sleep.
Also, Deep Sleep I/O is always LOW PRIORITY!

10 ONLINE DEEP SLEEP MODE

In this mode device works as in Deep Sleep mode, but without deregistering from GSM network. GSM part stays powered, so this increases power consumption. In this mode, device

should receive/send SMS and make/receive calls. Also not closes GPRS context, if previously opened.

Conditions to enter Online Sleep mode is the same as entering Deep Sleep mode.

FMB640 exits Online Sleep mode when if **ONE** of following conditions are true:

- Movement by accelerometer or configured movement source is detected;
- Ignition (configured Ignition Source) is turned on.

11 SMS COMMAND LIST

SMS commands are used to identify FMB640 current state, possible configuration errors, perform reset, set parameters, switch on/off outputs, etc.

SMS commands should be sent along with module login and password and sender number must be entered in the authorized number list (if at least one other number is entered). Please see SMS settings for more details.

SMS structure is as follows:

<login><space><password><space><command>

Example:

opa opa getgps

Table 21 SMS command list and description

Command	Description	Response
getstatus	Modem Status information	Yes
getnmeainfo	Nmea error debug sms	Yes
getcfgtime	Date and Time of last successful configuration	Yes
getgps	Current GPS data and time	Yes
cpureset	Reset CPU	No
getver	Device / Modem / Code version information	Yes
getinfo	Device runtime system information	Yes
deleterecords	Delete all records saved on FLASH	No
getio	Readout digital inputs and outputs, analog inputs	Yes
readio #	Readout input value according entered ID, # - ID value	Yes
setdigout XXXX Y1 Y2 Y3 Y4	Set digital outputs 0 – OFF, 1 – ON Y1 – timeout for DO1 Y2 – timeout for DO2 Y3 – timeout for DO3 Y4 – timeout for DO4	Yes
getparam #	Readout parameter value according entered ID. # - Element ID value.	Yes
setparam X:Y	Set parameter value according entered ID and Value. 1.X - ID value. 2.Y - New Parameter Value. To set more parameters in one SMS use this syntax: “setparam param_id:value;param_id2:value2”...	Yes
flush #,#,#,#,#,#,#	Initiates all data sending to specified target server 1.# - IMEI 2.# - APN	Yes

Command	Description	Response
	3.# - LOGIN 4.# - PASS 5.# - IP 6.# - PORT 7.# - MODE (0-TCP/1-UDP)	
banlist	Banlist information	Yes
crashlog	Crash log information	Yes
delete_all_sms	Delete all read SMS	No
getgnss	Current GNSS information	Yes
odinfo	Current odometer information	Yes

11.1 getstatus

Table 22 getstatus command response

Response details	Description
Data Link	Indicate module connection to server at the moment: 0 – Not connected, 1 – connected
GPRS	Indicate if GPRS is available at the moment
Phone	Voice Call status: 0 – ready, 1 – unavailable, 2 – unknown, 3 – ringing, 4 – call in progress, 5 – asleep
SIM	SIM Status: 0-ready, 1-pin, 2-puk, 3-pin2, 4-puk2
OP	Connected to GSM Operator: Numerical id of operator
Signal	GSM Signal Quality [0-5]
NewSMS	Indicate if new message received
Roaming	0 – Home Network, 1 – roaming
SMSFull	SMS storage is full? 0 – ok, 1 – SMS storage full
LAC	Location Area Code
Celll ID	Cell ID
Network Type	Information about connected network: 0 – 3G, 1- 2G
Active SIM	Active SIM

Answer Example: Data Link: 1 GPRS: 1(1) Phone: 0 SIM: 0 OP: 22288 Signal: 5 NewSMS: 0 Roaming: 0 SMSFull: 0 LAC: 26050 Cell ID: 34371 Network Type: 1 SIM1

11.2 getnmeainfo

Table 23 getnmeainfo command response

Response details	Description
BChSum	Nmea packets with bad checksum counter.
HAct	Actual HDOP
BT	Nmea packets with bad timestamp counter
BLat	Nmea packets with bad latitude counter
BLon	Nmea packets with bad longitude counter
BSpd	Nmea packets with bad speed counter
BAng	Nmea packets with bad angle counter
GJC	Nmea packets with GPS jumps counter
Rjc	Rejected Nmea packets counter

11.3 getcfgtime

Table 24 getcfgtime command response

Response details	Description
Date/Time	Returns last performed configuration date and time.

Answer Example: Last Configuration was performed on: 2010.4.15 5:45:19

11.4 getgps

Table 25 getgps command response

Response details	Description
GPS	Indicates valid (1) or invalid (0) GPS data
Sat	Count of currently available satellites
Lat	Latitude (Last good Latitude)
Long	Longitude (Last good Longitude)
Alt	Altitude, m
Speed	Ground speed, km/h
Dir	Ground direction, degrees
Date	Current date
Time	Current GMT time

Answer Example: GPS:1 Sat:7 Lat:54.71473 Long:25.30304 Alt:147 Speed:0 Dir:77 Date: 2007/8/24 Time: 13:4:36

11.5 cpureset

Resets cpu – does not send a response back to the sender.

11.6 resetallprof

Resets all FLASH profiles to default profile.
Answer Example: All Profiles Reseted.

11.7 getver

Table 26 getver command response

Response details	Description
Code Ver	Firmware version
Device IMEI	IMEI
Device ID	Device ID is used to detect which type of configuration to load
BL Ver	Bootloader Version
Modem App Ver	Version of modem application
Hw	Hardware type

Answer Example: Ver:00.00.11 IMEI:352093080615445 ID:000021 BL:16.05 Modem:TM25Q_R_01.00.01.00_005, 2017/10/23 16:11 Hw:FMB640 TM25Q HW.2 EXT SPC:0(0)

11.8 getio

Table 27 getio command response

Response details	Description
DI#	Digital Input state
DO#	Digital Output state
AI#	Analog Input state

Answer Example: DI1:0 DI2:0 DI3:0 DI4:0 AI1:0 AI2:0 DO1:0 DO2:0 DO3:0 DO4:0

11.9 getinfo

Table 28 getinfo command response

Response details	Description
INI	Device Initialization Time
RTC	RTC Time
RST	Restart Counter
ERR	Error Counter
SR	Number of Sent Records
BR	Number of broken records
CF	Profile CRC Fail counter
FG	Failed GPRS counter
FL	Failed link counter
UT	UPD Timeout counter
SMS	Sent SMS Counter
NOGPS	No GPS Timer
GPS	GPS receiver state. 0 – OFF, 1 – restarting, 2 – ON but no fix, 3 – ON and operational, 4 – sleep mode
SAT	Average satellites
RS	Reset Source Identification
RF	Number of records found on FLASH

Answer Example: INI:1970/1/1 0:0 RTC:2018/5/29 5:31 RST:2 ERR:3 SR:3 BR:0 CF:0 FG:0 FL:0 UT:0 SMS:0 NOGPS:0:3 GPS:1 SAT:6 RS:2 RF:14 SF:0 MD:1[2018.05.29 05:31:06]-[ACC]-> Auto:0 AxlNow:-0.019105,-0.015442,-1.024873

11.10 deleterecords

Deletes all saved records from device memory. Device does not send a response back to the sender.

11.11 readio

Table 29 readio command response

Response details	Description
ID	IO element ID
Value	IO Element value

Answer Example: IO ID:3 Value:0

11.12 setdigout #### X Y Z W

Sets digital outputs to ON or OFF state.Value is written as a row for OUT1, OUT2, OUT3, OUT4 values.

Example: 'setdigout 0010 0 0 5 0' will set OUT3 to high level for 5 seconds, while OUT1, OUT3 and OUT4 to low level.

Device Ans example: "DOUTS are set to:0010 TMOs are: 0 0 5 0. Out1 Scenario: Enabled Out2 Scenario: Disabled"

11.13 getparam

Read parameter value. ID consists of up to 5 digits .

Table 30 getparam #

Response details	Description
ID	Parameter ID
Value	Parameter value

Example: 'getparam 70060' command will request VIN code.

11.14 setparam <ParameterID>:<value>

Sets new value for parameter. ID consists of up to 5 digits. In value field a new parameter value is entered.

Example: 'setparam 2001:internet' will change SIM1 APN with new value"internet"

For ignoring value and leave it as it was before "?" should be used. Additional parameter values are seperated with semicolon, like setparam 2001:internet;206:1

11.15 flush #,#,#,#,#,#,#

Initiates all data sending by GPRS to specified target server. Comma separated parameters go as numbered:

1.# - IMEI
2.# - APN
3.# - GPRS LOGIN
4.# - GPRS PASSWORD
5.# - IP
6.# - PORT
7.# - MODE (0-TCP/1-UDP)

Parameters are separated by comma (no spaces needed). In case you do not need to enter parameter (Login/Pass) – do not put space, simply put comma and write next parameter.

Example: opa opa flush 353976012555151,banga,,,212.47.99.62,12050,0

Table 31 flush SMS

Response details	Description
FLUSH SMS Accepted	FLUSH SMS Accepted
# records found on FLASH	Number of records found on FLASH

Minimum Records to Send: #	Number of minimum saved records to send
GPRS Enabled: #	State of the GPRS connection, 0 – disabled; 1 – enabled
Time Sync: #	Indicates time synchronization on the device, 0 – not synchronized; 1 – synchronized

Answer Example: FLUSH SMS Accepted. 11 records found on FLASH. Minimum Records to Send: 1. GPRS Enabled: 1. Time Sync: 1.

11.16 getgnss

Table 32 getgnss

Response details	Description
FIX	GPS fix
SAT GL	Total glonass sattelites
GP	Total gps sattelites

Answer Example: FIX:1 SAT GL:5 GP:10

11.17 banlist

Returns a list of possible banned operators. If device returns zeroes, there are no banned operators saved. Format: A.Bs.C.D

Table 33 banlist

Response details	Description
A	Banned operator code
Bs	Time left
C	Reason (1 – can't connect to operator; 2 – can't open GPRS connection; 3 – operator closed connection itself; 4 – connection to operator was successful, but after that device was disconnected from GSM network)
D	Counter (how many times this operator code was already banned)

11.18 braminfo

Table 34 braminfo

Response details	Description
Boot	Bootloader parameter
Uptime	Device uptime
RST	Device reset counter
IWDF_RST	Independent watchdog reset counter
BadRec	Bad record counter
AD	Authorized driving state
GD	ECO driving/Green driving state
IM	Immobilizer state

11.19 odinfo

Odometer Debug info.

Table 35 odinfo

Field Name	Full Name	Posible values
E	Odometer Enable	0-Disable 1-Enabled
V	Odometer Value	0-UINT32_MAX
M:	Mode	0- Differential 1- Continuous
Mv:	Movement	0- Not moving 1- moving
GPS:	GPS Module Status	0-OFF 1-Restarting 2-Ready no FIX 3-Working FIX 4-Sleep
FIX:	GPS FIX	0- No FIX 1- FIX
Valid:	Valid Nmea data	0- Not Valid 1- Valid
Sp:	GPS Speed	[0-350]
Ns:	Nmea Stable Flag	0 – Not Stable 1 –Stable
Jl:	Jump Lock	0- Lock ON 2- Lock OFF
ALong:	Current Longitude	
ALat:	Current Latitude	
OLong:	Odometer Longitude	
OLat:	Odometer Latitude	

Answer Example: E:1 V:300 M:1 Mv:1, GPS:2 FIX:0 Valid:1 Sp:0 Ns:0 Jl:1 ALong:0.000000 ALat:0.000000 OLong:0.000000 OLat: 0.000000

12 PARAMETER LIST

12.1 System parameters

12.1.1 Sleep Mode (ID=102)

Device has three sleep modes: GPS sleep, Deep Sleep and Online Deep Sleep mode. While sleep is disabled (value 0) module will never enter sleep mode, in sleep mode (value 1) module reduces level of power usage by turning GPS module to sleep, in deep sleep mode (value 2) module turns GPS module to sleep and device is deregistered from network (note, that FMB640 do not receive SMS while in deep sleep), online Deep Sleep mode (value 3) device works as in Deep Sleep mode, but without deregistering from GSM network. GSM part stays powered, so this increases power consumption. In this mode, device should received/send SMS and make/receive calls. Also not closes GPRS context, if previously opened.

Minimum value	Maximum value	Default value	Goes with (depends on) parameters	Value type

0	3	2	Sleep timeout (ID=103)	Uint8

12.1.2 Sleep timeout (ID=103)

Sleep timeout is time after which FMB640 goes to GPS sleep, Deep Sleep or Online Deep Sleep if other requirements are met. It is measured in minutes.

Minimum value	Maximum value	Default value	Goes with (depends on) parameters	Value type
1	3000	10	Sleep Mode (ID=102)	Uint8

12.1.3 Static Navigation (ID=106)

When static navigation is enabled, FMB640 filters out GPS jumps, when it is not moving. When it is disabled, it does not make any changes to collected GPS data.

Minimum value	Maximum value	Default value	Goes with (depends on) parameters	Value type
0	1	1	Static Navigation Settings (ID=112)	Uint8

12.1.4 Save records to (ID=1003)

Minimum value	Maximum value	Default value	Goes with (depends on) parameters	Value type
0	1	0		Uint8

12.1.5 Analog input value range (ID=111)

Sets AIN measurement range: 0 – 10 V, 0 – 30 V (for now 0 – 10 V range works same as 0 – 30 V range).

Minimum value	Maximum value	Default value	Goes with (depends on) parameters	Value type
0	1	1		Uint8

12.1.6 Analog Input Value Range 3-4 (ID=114)

Minimum value	Maximum value	Default value	Goes with (depends on) parameters	Value type
0	1	1		Uint8

12.1.7 AIN4/DOUT4 Mode (ID=115)

Minimum value	Maximum value	Default value	Goes with (depends on) parameters	Value type
0	1	0		Uint8

12.1.8 J1708 settings (ID=116)

Minimum value	Maximum value	Default value	Goes with (depends on) parameters	Value type
0	1	0		Uint8

12.1.9 Odometer Source Settings (ID=117)

Minimum value	Maximum value	Default value	Goes with (depends on) parameters	Value type
0	4	0		Uint8

12.1.10 Speed Source settings (ID=118)

Minimum value	Maximum value	Default value	Goes with (depends on) parameters	Value type
0	4	0		Uint8

12.1.11 Saving/Sending without (TS) time synchronization (ID=107)

When this feature is enabled (value = 1), then records can be saved and sent to server without time synchronization.

Minimum value	Maximum value	Default value	Goes with (depends on) parameters	Value type
0	1	1		Uint8

12.1.12 Ping mode (ID=1004)

Minimum value	Maximum value	Default value	Goes with (depends on) parameters	Value type
0	2	0		Uint8

12.1.13 Ping timeout (min.) (ID=1005)

Minimum value	Maximum value	Default value	Goes with (depends on) parameters	Value type
0	259200	60		Uint8

12.1.14 GNSS Source (ID=109)

This parameter sets Satellite System, available values:

1 – GPS only

2 – GLONASS only

3 – GPS + GLONASS

Minimum value	Maximum value	Default value	Goes with (depends on) parameters	Value type
1	3	3		Uint8

12.1.15 Ignition settings (ID=101)

Multiple ignition sources can be set. Thanks to 6 possible ignition sources there are different 63 options of configuration.

Minimum value	Maximum value	Default value	Goes with (depends on) parameters	Value type
1	63	32	High voltage level (ID=104) Low voltage level (ID=105) Movement Start Delay(s) (ID=19001) Movement Stop Delay(s) (ID=19002)	Uint8

12.1.16 Sets High voltage level (ID=104)

High level of voltage. Configured value must be higher than Low voltage level.

Minimum value	Maximum value	Default value	Goes with (depends on) parameters	Value type
0	30000	30000	Ignition settings (ID=101) Low voltage level (ID=105)	Uint16

12.1.17 Low voltage level (ID=105)

Sets low level of voltage.

Minimum value	Maximum value	Default value	Goes with (depends on) parameters	Value type
0	29999 (but lower than high level)	13200	Ignition settings (ID=101) High voltage level (ID=104)	Uint16

12.1.18 Movement Start Delay(s) (ID=19001)

What Acceleromer Ignition source delay will be after Ignition on.

Minimum value	Maximum value	Default value	Goes with (depends on) parameters	Value type
1	60	1	Ignition settings (ID=101) Movement Stop Delay(s) (ID=19002)	Uint8

12.1.19 Movement Stop Delay(s) (ID=19002)

What Accelerometer Ignition source delay will be after Ignition off.

Minimum value	Maximum value	Default value	Goes with (depends on) parameters	Value type
5	60	60	Ignition settings (ID=101)	Uint16

			Movement Start Delay(s) (ID=19001)	

12.1.20 Synchronization settings (ID=900)

Settings used for device internal time synchronization: 0 – GPS only, 1 – NITZ and NTP, 2 – NTP, 3 – NITZ.

Minimum value	Maximum value	Default value	Goes with (depends on) parameters	Value type
0	3	1	NTP Resync (ID=901) NTP server 1 (ID=902) NTP server 2 (ID=903)	Uint8

12.1.21 NTP Resync (ID=901)

Periodical time synchronization. If not zero FMB640 will resynchronize time once set period expires.

Minimum value	Maximum value	Default value	Goes with (depends on) parameters	Value type
0	24	0	Synchronization settings (ID=900) NTP server 1 (ID=902) NTP server 2 (ID=903)	Uint8

12.1.22 NTP server 1 (ID=902)

Minimum value	Maximum value	Default value	Goes with (depends on) parameters	Value type
0	55 char string	avl1.teltonika.lt	Synchronization settings (ID=900) NTP Resync (ID=901) NTP server 2 (ID=903)	S8[55]

12.1.23 NTP server 2 (ID=903)

Minimum value	Maximum value	Default value	Goes with (depends on) parameters	Value type
0	55 char string	pool.ntp.org	Synchronization settings (ID=900) NTP Resync (ID=901) NTP server 1 (ID=902)	S8[55]

12.2 GPRS parameters

12.2.1 Sorting (ID=1002)

Record sorting parameter is responsible for record sorting order. Value of 0 arranging data starting from newest, while value of 1 arranging data starting from oldest.

Minimum value	Maximum value	Default value	Goes with (depends on) parameters	Value type

0	1	0	Open Link Timeout (ID=1000) Server Response Timeout (ID=1001)	Uint8

12.2.2 Open Link Timeout (ID=1000)

Defines for how many seconds device will keep connection to the server after successful data transfer while waiting for a new record.

Minimum value	Maximum value	Default value	Goes with (depends on) parameters	Value type
30	259200	30	Sorting (ID=1002) Server Response Timeout (ID=1001)	Uint32

12.2.3 Server Response Timeout (ID=1001)

Defines time period (in seconds) for server response to sent records.

Minimum value	Maximum value	Default value	Goes with (depends on) parameters	Value type
5	300	30	Sorting (ID=1002) Open Link Timeout (ID=1000)	Uint16

ATTENTION! Some GSM operators may disconnect the device from an active data link if the device doesn't send any data for a very long time, even if active data link timeout is set to maximum value. The amount of time that an operator keeps the link open depends solely on the operator. For example, if active data link timeout is set to maximum, 259200 seconds (72 hours), and the device sends data to server every 86400 seconds (24 hours), the operator might disconnect the link earlier and the device will have to connect to the server anew. This may cost extra, depending on the operator GPRS data charge. It is strongly recommended, when using active data link timeout, that data sending to the server should not be very rare (24 hours or more). If data sending is more frequent, then the operator will not disconnect the device form the server.

12.2.4 SIM1 GPRS content activation (ID=2000)

Parameter allows or does not allow GPRS usage with SIM1. If GPRS is not allowed value is 0, if GPRS is allowed value is 1.

Minimum value	Maximum value	Default value	Goes with (depends on) parameters	Value type
0	1	1	SIM1 SIM1 APN Name (ID=2001) SIM1 SIM1 APN username (ID=2002) SIM1 SIM1 APN Password (ID=2003)	Uint8

12.2.5 SIM1 APN Name (ID=2001)

Parameter defines SIM1 GPRS Access Point Name.

Minimum value	Maximum value	Default value	Goes with (depends on) parameters	Value type
0	32 char string	Empty	SIM1 SIM1 GPRS content activation (ID=2000) SIM1 SIM1 APN username (ID=2002) SIM1 SIM1 APN Password (ID=2003)	S8[32]

12.2.6 SIM1 APN username (ID=2002)

Parameter defines SIM1 APN username. In case operator does not use username for login, value should be empty.

Minimum value	Maximum value	Default value	Goes with (depends on) parameters	Value type
0	30 char string	Empty	SIM1 SIM1 GPRS content activation (ID=2000) SIM1 SIM1 APN Name (ID=2001) SIM1 SIM1 APN Password (ID=2003)	S8[30]

12.2.7 SIM1 APN Password (ID=2003)

Parameter defines SIM1 APN password. In case operator does not use password for login, value should be empty.

Minimum value	Maximum value	Default value	Goes with (depends on) parameters	Value type
0	30 char string	Empty	SIM1 SIM1 GPRS content activation (ID=2000) SIM1 SIM1 APN Name (ID=2001) SIM1 SIM1 APN username (ID=2002)	S8[30]

12.2.8 SIM2 GPRS content activation (ID=2011)

Parameter allows or does not allow GPRS usage with SIM2. If GPRS is not allowed value is 0, if GPRS is allowed value is 1.

Minimum value	Maximum value	Default value	Goes with (depends on) parameters	Value type
0	1	1	SIM2 APN Name (ID=2012) SIM2 APN username (ID=2013) SIM2 APN Password (ID=2014)	Uint8

12.2.9 SIM2 APN Name (ID=2012)

Parameter defines SIM2 GPRS Access Point Name.

Minimum	Maximum	Default value	Goes with (depends on)	Value

value	value		parameters	type
0	32 char string	Empty	SIM2 GPRS content activation (ID=2011) SIM2 APN username (ID=2013) SIM2 APN Password (ID=2014)	S8[32]

12.2.10 SIM2 APN username (ID=2013)

Parameter defines SIM2 APN username. In case operator does not use username for login, value should be empty.

Minimum value	Maximum value	Default value	Goes with (depends on) parameters	Value type
0	30 char string	Empty	SIM2 GPRS content activation (ID=2011) SIM2 APN Name (ID=2012) SIM2 APN Password (ID=2014)	S8[30]

12.2.11 SIM2 APN Password (ID=2014)

Parameter defines SIM2 APN password. In case operator does not use password for login, value should be empty.

Minimum value	Maximum value	Default value	Goes with (depends on) parameters	Value type
0	30 char string	Empty	SIM2 GPRS content activation (ID=2011) SIM2 APN Name (ID=2012) SIM2 APN username (ID=2013)	S8[30]

12.2.12 Server #1 Domain (ID=2004)

Parameter defines AVL data destination server IP address. Example: 212.47.99.62

Minimum value	Maximum value	Default value	Goes with (depends on) parameters	Value type
0	55 char string	Empty	SIM1 GPRS content activation (ID=2000)	S8[55]

12.2.13 Target Server #1 Port (ID=2005)

Parameter defines AVL data destination server port number. Example: 12050

Minimum value	Maximum value	Default value	Goes with (depends on) parameters	Value type
0	65535	0	SIM1 GPRS content activation (ID=2000)	Uint16

12.2.14 Server #1 Protocol (ID=2006)

Parameter defines GPRS data transport protocol. Module can use TCP or UDP transport protocol to send data to server. For TCP protocol value is 0, for UDP protocol value is 1.

Minimum	Maximum	Default value	Goes with (depends on)	Value

value	value		parameters	type
0	1	0	SIM1 GPRS content activation (ID=2000)	Uint8

12.2.15 Server #2 Server Domain (ID=2007)

Parameter defines AVL data destination backup server IP address. Example: 212.47.99.61

Minimum value	Maximum value	Default value	Goes with (depends on) parameters	Value type
0	55 char string	Empty	SIM1 GPRS content activation (ID=2000) Backup Server Mode (ID=2010)	S8[55]

12.2.16 Server #2 Server Port (ID=2008)

Parameter defines AVL data destination backup server port number. Example: 12051

Minimum value	Maximum value	Default value	Goes with (depends on) parameters	Value type
0	65535	0	SIM1 GPRS content activation (ID=2000)	Uint16

12.2.17 2nd Server Protocol (ID=2009)

Parameter defines GPRS data transport protocol. Module can use TCP or UDP transport protocol to send data to backup server. For TCP protocol value is 0, for UDP protocol value is 1.

Minimum value	Maximum value	Default value	Goes with (depends on) parameters	Value type
0	1	0	SIM1 GPRS content activation (ID=2000)	Uint8

12.2.18 FOTA WEB status (ID=13003)

Parameter allows or does not allow connection to FOTA WEB server.

Minimum value	Maximum value	Default value	Goes with (depends on) parameters	Value type
0	1	1	FOTA WEB Domain (ID=13000) FOTA WEB port (ID=13001) FOTA WEB Period (min) (ID=13002)	Uint8

12.2.19 FOTA WEB Domain (ID=13000)

FOTA WEB server IP or DNS address.

Minimum value	Maximum value	Default value	Goes with (depends on) parameters	Value type
0	55 char string	85.206.140.106	FOTA WEB status (ID=13003) FOTA WEB port (ID=13001) FOTA WEB Period (min) (ID=13002)	S8[55]

12.2.20 FOTA WEB port (ID=13001)

FOTA WEB server port.

Minimum value	Maximum value	Default value	Goes with (depends on) parameters	Value type
0	65535	5000	FOTA WEB status (ID=13003) FOTA WEB Domain (ID=13000) FOTA WEB Period (min) (ID=13002)	Uint16

12.2.21 FOTA WEB Period (min) (ID=13002)

Period defines how often device is going to connect to server.

Minimum value	Maximum value	Default value	Goes with (depends on) parameters	Value type
30	65535	720	FOTA WEB status (ID=13003) FOTA WEB Domain (ID=13000) FOTA WEB port (ID=13001)	Uint16

12.3 SMS/Call settings

12.3.1 SMS data sending settings (ID=3000)

Parameter allows or does not allow sending AVL data using binary SMS. If SMS use is not allowed value is 0 and 1 if SMS use is allowed.

Minimum value	Maximum value	Default value	Goes with (depends on) parameters	Value type
0	1	0	Data send number (ID=3001)	Uint8

12.3.2 Data send number (ID=3001)

In this field are written GSM numbers, to which will be sent Data SMS.

Minimum value	Maximum value	Default value	Goes with (depends on) parameters	Value type
Empty	16 digits	-	SMS data sending settings (ID=3000)	S8[16]

12.3.3 Authorized phone numbers (ID=4000-4199)

If at least one number is entered then only those number can send messages to device.
Example: +37060012346

Minimum value	Maximum value	Default value	Goes with (depends on) parameters	Value type
Empty	16 digits	-	SMS Login (ID=3003) SMS Password (ID=3004) Digital Output control (ID=12000)	S8[16]

12.3.4 SMS Events AVL ID list (ID=9000-9009)

Minimum value	Maximum value	Default value	Goes with (depends on) parameters	Value type

0	255	0	GSM Predefined Numbers (ID=7000-7009)	Uint8

12.3.5 GSM Predefined Numbers (ID=7000-7009)

In this field GSM numbers are written, to which will be sent "Event SMS" text message.
Example: +37060012346

Minimum value	Maximum value	Default value	Goes with (depends on) parameters	Value type
Empty	16 digits	-	SMS Events AVL ID list (ID=9000-9009)	S8[16]

12.3.6 SMS Login (ID=3003)

User login is used to ensure module security. Used in every SMS that is sent to device. Example: ba321

Minimum value	Maximum value	Default value	Goes with (depends on) parameters	Value type
Empty	5 char	-	SMS Password (ID=3004) SMS Event Time Zone (ID=3006)	S8[5]

12.3.7 SMS Password (ID=3004)

User password is used to ensure module security. Used in every SMS that is sent to device. Example: ab123

Minimum value	Maximum value	Default value	Goes with (depends on) parameters	Value type
Empty	5 char	-	SMS Login (ID=3003) SMS Event Time Zone (ID=3006)	S8[5]

12.3.8 Incoming call action (ID=3005)

Parameter defines action during call: 0 – do nothing, 1 – hang up, 2 – report position, 3 – Not used, 4 –Auto Answer (HF).

Minimum value	Maximum value	Default value	Goes with (depends on) parameters	Value type
0	4	0		Uint8

12.3.9 SMS Event Time Zone (ID=3006)

Time zone which will be used in eventual SMS messages.

Minimum value	Maximum value	Default value	Goes with (depends on) parameters	Value type
-720	840	0	SMS Password (ID=3004) SMS Login (ID=3003)	Uint16

12.3.10 DIN 1 Call Trigger (ID=3009)

Minimum value	Maximum value	Default value	Goes with (depends on) parameters	Value type
0	1	0	DIN 1 GSM Number (ID=3010)	Uint8

12.3.11 DIN1 GSM Number (ID=3010)

Minimum value	Maximum value	Default value	Goes with (depends on) parameters	Value type
0	10	0	DIN 2 Call Trigger (ID=3011)	Uint8

12.3.12 DIN 2 Call Trigger (ID=3011)

Minimum value	Maximum value	Default value	Goes with (depends on) parameters	Value type
0	1	0	DIN 2 GSM Number (ID=3012)	Uint8

12.3.13 DIN2 GSM Number (ID=3012)

Minimum value	Maximum value	Default value	Goes with (depends on) parameters	Value type
0	10	0	DIN 2 Call Trigger (ID=3011)	Uint8

12.3.14 DIN 3 Call Trigger (ID=3013)

Minimum value	Maximum value	Default value	Goes with (depends on) parameters	Value type
0	1	0	DIN 3 GSM Number (ID=3014)	Uint8

12.3.15 DIN 3 GSM Number (ID=3014)

Minimum value	Maximum value	Default value	Goes with (depends on) parameters	Value type
0	10	0	DIN 3 Call Trigger (ID=3013)	Uint8

12.3.16 DIN 4 Call Trigger (ID=3015)

Minimum value	Maximum value	Default value	Goes with (depends on) parameters	Value type
0	1	0	DIN 4 GSM Number (ID=3016)	Uint8

12.3.17 DIN 4 GSM Number (ID=3016)

Minimum value	Maximum value	Default value	Goes with (depends on) parameters	Value type
0	10	0	DIN 4 Call Trigger (ID=3015)	Uint8

12.4 GSM Operators

12.4.1 SIM1 Roaming Operator List (ID=5000-5049)

Parameter defines roaming operator list for SIM 1. According to this list module selects operating profile. If roaming operator list is left empty, FMB640 will automatically detect home operator. If home operator will be written to roaming operator list any part, it will be detected as home operator, not roaming. All other written operators are Preferred Roaming Operator Codes.

Minimum value	Maximum value	Default value	Goes with (depends on) parameters	Value type
0	999999	0	Black List (ID=5500-5549)	Uint32

12.4.2 SIM2 Roaming/ Home Operator List (ID=9500-9549)

Parameter defines roaming/ home operator list for SIM2. More information about operator search functionality in.

Minimum value	Maximum value	Default value	Goes with (depends on) parameters	Value type
0	999999	0	Black List (ID=5500-5549)	Uint32

12.4.3 Black List (ID=5500-5549)

Operator Blacklist - if user wants that FMB640 do not connect and work with a particular operator it must be written to Operator BlackList.

Minimum value	Maximum value	Default value	Goes with (depends on) parameters	Value type
0	999999	0	Roaming Operator List (ID=5000-5049)	Uint32

12.5 Data Acquisition parameters

12.5.1 Home Network GSM operator code "Vehicle on STOP" parameters

12.5.1.1 Min Period (ID=10000)

This parameter indicates time interval in seconds in order to acquire new record. If value is 0 it means no records by min period will be saved.

Minimum value	Maximum value	Default value	Goes with (depends on) parameters	Value type
0	2592000	3600	Min Saved Records (ID=10004) Send Period (ID=10005)	Uint32

12.5.1.2 Min Saved Records (ID=10004)

This parameter defines minimum number of records in one data packet that can be sent to server. It has higher priority than Data Send Period (ID=10005).

Minimum value	Maximum value	Default value	Goes with (depends on) parameters	Value type
1	255	1	Min Period (ID=10000) Send Period (ID=10005)	Uint8

12.5.1.3 Send Period (ID=10005)

This parameter indicates frequency (time interval in seconds) of sending data to server.

Minimum value	Maximum value	Default value	Goes with (depends on) parameters	Value type
0	2592000	120	Min Period (ID=10000) Min Saved Records (ID=10004)	Uint32

12.5.2 Home Network GSM operator code "Vehicle MOVING" parameters

12.5.2.1 Min Period (ID=10050)

This parameter indicates time interval in seconds in order to acquire new record. If value is 0 it means no records by min period will be saved.

Minimum value	Maximum value	Default value	Goes with (depends on) parameters	Value type
0	2592000	300	Min Distance (ID=10051) Min Angle (ID=10052) Min Speed Delta (ID=10053) Min Saved Records (ID=10054) Send Period (ID=10055)	Uint32

12.5.2.2 Min Distance (ID=10051)

This parameter indicates distance in meters in order to acquire new record. Record is stored when the distance between previous records is greater than parameters value. If value is 0 it means no records by min distance will be saved.

Minimum value	Maximum value	Default value	Goes with (depends on) parameters	Value type
0	65535	100	Min Period (ID=10050) Min Angle (ID=10052) Min Speed Delta (ID=10053) Min Saved Records (ID=10054) Send Period (ID=10055)	Uint16

12.5.2.3 Min Angle (ID=10052)

This parameter indicates angle in degrees in order to acquire new record. If angle difference between last recorded coordinate and current position is greater than defined value, new record is stored. This parameter is operational, when speed is higher than 10km/h. If value is 0 it means no records by min angle will be saved.

Minimum value	Maximum value	Default value	Goes with (depends on) parameters	Value type
0	180	10	Min Period (ID=10050) Min Distance (ID=10051) Min Speed Delta (ID=10053) Min Saved Records (ID=10054)	Uint8

			Send Period (ID=10055)	

12.5.2.4 Min Speed Delta (ID=10053)

This parameter indicates speed difference in order to acquire new record. If speed difference between last recorded coordinate and current position is greater than defined value, new record is stored. If value is 0 it means no records by min speed delta will be saved.

Minimum value	Maximum value	Default value	Goes with (depends on) parameters	Value type
0	255	10	Min Period (ID=10050) Min Distance (ID=10051) Min Angle (ID=10052) Min Saved Records (ID=10054) Send Period (ID=10055)	Uint8

12.5.2.5 Min Saved Records (ID=10054)

This parameter defines minimum number of records in one data packet that can be sent to server. It has higher priority than Data Send Period (ID=10055).

Minimum value	Maximum value	Default value	Goes with (depends on) parameters	Value type
1	255	1	Min Period (ID=10050) Min Distance (ID=10051) Min Angle (ID=10052) Min Speed Delta (ID=10053) Send Period (ID=10055)	Uint8

12.5.2.6 Send Period (ID=10055)

This parameter indicates frequency (time interval in seconds) of sending data to server.

Minimum value	Maximum value	Default value	Goes with (depends on) parameters	Value type
0	2592000	120	Min Period (ID=10050) Min Distance (ID=10051) Min Angle (ID=10052) Min Speed Delta (ID=10053) Min Saved Records (ID=10054)	Uint32

12.5.3 Roaming Network GSM operator code "Vehicle on STOP" parameters

12.5.3.1 Min Period (ID=10100)

This parameter indicates time interval in seconds in order to acquire new record. If value is 0 it means no records by min period will be saved.

Minimum value	Maximum value	Default value	Goes with (depends on) parameters	Value type
0	2592000	3600	Min Saved Records (ID=10104)	Uint32

			Send Period (ID=10105)	

12.5.3.2 Min Saved Records (ID=10104)

This parameter defines minimum number of records in one data packet that can be sent to server. It has higher priority than Data Send Period (ID=10105).

Minimum value	Maximum value	Default value	Goes with (depends on) parameters	Value type
1	255	1	Min Period (ID=10100) Send Period (ID=10105)	Uint8

12.5.3.3 Send Period (ID=10105)

This parameter indicates frequency (time interval in seconds) of sending data to server.

Minimum value	Maximum value	Default value	Goes with (depends on) parameters	Value type
0	2592000	120	Min Period (ID=10100) Min Saved Records (ID=10104)	Uint32

12.5.4 Roaming Network GSM operator code "Vehicle MOVING" parameters

12.5.4.1 Min Period (ID=10150)

This parameter indicates time interval in seconds in order to acquire new record. If value is 0 it means no records by min period will be saved.

Minimum value	Maximum value	Default value	Goes with (depends on) parameters	Value type
0	2592000	300	Min Distance (ID=10151) Min Angle (ID=10152) Min Speed Delta (ID=10153) Min Saved Records (ID=10154) Send Period (ID=10155)	Uint32

12.5.4.2 Min Distance (ID=10151)

This parameter indicates distance in meters in order to acquire new record. Record is stored when the distance between previous records is greater than parameter's value. If value is 0 it means no records by min distance will be saved.

Minimum value	Maximum value	Default value	Goes with (depends on) parameters	Value type
0	65535	100	Min Period (ID=10150) Min Angle (ID=10152) Min Speed Delta (ID=10153) Min Saved Records (ID=10154) Send Period (ID=10155)	Uint16

12.5.4.3 Min Angle (ID=10152)

This parameter indicates angle in degrees in order to acquire new record. If angle difference between last recorded coordinate and current position is greater than defined value,

new record is stored. This parameter is operational, when speed is higher than 10km/h. If value is 0 it means no records by min angle will be saved.

Minimum value	Maximum value	Default value	Goes with (depends on) parameters	Value type
0	180	10	Min Period (ID=10150) Min Distance (ID=10151) Min Speed Delta (ID=10153) Min Saved Records (ID=10154) Send Period (ID=10155)	Uint8

12.5.4.4 Min Speed Delta (ID=10153)

This parameter indicates speed difference in order to acquire new record. If speed difference between last recorded coordinate and current position is greater than defined value, new record is stored. If value is 0 it means no records by min speed delta will be saved.

Minimum value	Maximum value	Default value	Goes with (depends on) parameters	Value type
0	255	10	Min Period (ID=10150) Min Distance (ID=10151) Min Angle (ID=10152) Min Saved Records (ID=10154) Send Period (ID=10155)	Uint8

12.5.4.5 Min Saved Records (ID=10154)

This parameter defines minimum number of records in one data packet that can be sent to server. It has higher priority than Data Send Period (ID=10105).

Minimum value	Maximum value	Default value	Goes with (depends on) parameters	Value type
1	255	1	Min Period (ID=10150) Min Distance (ID=10151) Min Angle (ID=10152) Min Speed Delta (ID=10153) Send Period (ID=10155)	Uint8

12.5.4.6 Send Period (ID=10155)

This parameter indicates frequency (time interval in seconds) of sending data to server.

Minimum value	Maximum value	Default value	Goes with (depends on) parameters	Value type
0	2592000	120	Min Period (ID=10150) Min Distance (ID=10151) Min Angle (ID=10152) Min Speed Delta (ID=10153) Min Saved Records (ID=10154)	Uint32

12.5.5 Unknown Network GSM operator code "Vehicle on STOP" parameters

12.5.5.1 Min Period (ID=10200)

This parameter indicates time interval in seconds in order to acquire new record. If value is 0 it means no records by min period will be saved.

Minimum value	Maximum value	Default value	Goes with (depends on) parameters	Value type
0	2592000	3600	Min Saved Records (ID=10204) Send Period (ID=10205)	Uint32

12.5.5.2 Min Saved Records (ID=10204)

This parameter defines minimum number of records in one data packet that can be sent to server. It has higher priority than Data Send Period (ID=10205).

Minimum value	Maximum value	Default value	Goes with (depends on) parameters	Value type
1	255	1	Min Period (ID=10200) Send Period (ID=10205)	Uint8

12.5.5.3 Send Period (ID=10205)

This parameter indicates frequency (time interval in seconds) of sending data to server.

Minimum value	Maximum value	Default value	Goes with (depends on) parameters	Value type
0	2592000	120	Min Period (ID=10200) Min Saved Records (ID=10204)	Uint32

12.5.6 Unknown Network GSM operator code "Vehicle MOVING" parameters

12.5.6.1 Min Period (ID=10250)

This parameter indicates time interval in seconds in order to acquire new record. If value is 0 it means no records by min period will be saved.

Minimum value	Maximum value	Default value	Goes with (depends on) parameters	Value type
0	2592000	300	Min Distance (ID=10251) Min Angle (ID=10252) Min Speed (ID=10253) Min Saved Records (ID=10254) Send Period (ID=10255)	Uint32

12.5.6.2 Min Distance (ID=10251)

This parameter indicates distance in meters in order to acquire new record. Record is stored when the distance between previous records is greater than parameter's value. If value is 0 it means no records by min distance will be saved.

Minimum value	Maximum value	Default value	Goes with (depends on) parameters	Value type
0	65535	100	Min Period (ID=10250) Min Angle (ID=10252) Min Speed (ID=10253) Min Saved Records (ID=10254) Send Period (ID=10255)	Uint16

12.5.6.3 Min Angle (ID=10252)

This parameter indicates angle in degrees in order to acquire new record. If angle difference between last recorded coordinate and current position is greater than defined value, new record is stored. This parameter is operational, when speed is higher than 10km/h. If value is 0 it means no records by min angle will be saved.

Minimum value	Maximum value	Default value	Goes with (depends on) parameters	Value type
0	180	10	Min Period (ID=10250) Min Distance (ID=10251) Min Speed (ID=10253) Min Saved Records (ID=10254) Send Period (ID=10255)	Uint8

12.5.6.4 Min Speed Delta (ID=10253)

This parameter indicates speed difference in order to acquire new record. If speed difference between last recorded coordinate and current position is greater than defined value, new record is stored. If value is 0 it means no records by min speed delta will be saved.

Minimum value	Maximum value	Default value	Goes with (depends on) parameters	Value type
0	255	10	Min Period (ID=10250) Min Distance (ID=10251) Min Angle (ID=10252) Min Saved Records (ID=10254) Send Period (ID=10255)	Uint8

12.5.6.5 Min Saved Records (ID=10254)

This parameter defines minimum number of records in one data packet that can be sent to server. It has higher priority than Data Send Period (ID=10105).

Minimum value	Maximum value	Default value	Goes with (depends on) parameters	Value type
1	255	1	Min Period (ID=10250) Min Distance (ID=10251) Min Angle (ID=10252) Min Speed (ID=10253)	Uint8

			Send Period (ID=10255)	

12.5.6.6 Send Period (ID=10255)

This parameter indicates frequency (time interval in seconds) of sending data to server.

Minimum value	Maximum value	Default value	Goes with (depends on) parameters	Value type
0	2592000	120	Min Period (ID=10250) Min Distance (ID=10251) Min Angle (ID=10252) Min Speed (ID=10253) Min Saved Records (ID=10254)	Uint32

12.6 Features Parameters

12.6.1 Green driving parameters

12.6.1.1 Max Acceleration Force (ID=11004)

It is max allowed acceleration force which can be reached while accelerating without triggering harsh acceleration event (m/s^2).

Minimum value	Maximum value	Default value	Goes with (depends on) parameters	Value type
0.5	10	2.2	Green driving priority (ID=11000) Max Braking Force (ID=11005) Max Cornering (ID=11006) Green/Eco driving (ID=11007) Green driving digital output control settings (ID=11003) Green driving Digital output on duration (ID=11001) Green driving Digital output off duration (ID=11002)	float

12.6.1.2 Max Braking Force (ID=11005)

It is max allowed braking force which can be reached while braking without triggering harsh braking event (m/s^2).

Minimum value	Maximum value	Default value	Goes with (depends on) parameters	Value type
0.5	10	2.5	Green driving priority (ID=11000) Max Acceleration Force (ID=11004) Max Cornering (ID=11006) Green/Eco driving (ID=11007) Green driving digital output control settings (ID=11003)	float

			Green driving Digital output on duration (ID=11001) Green driving Digital output off duration (ID=11002)	

12.6.1.3 Max Cornering (ID=11006)

It is max allowed cornering angle which can be reached while cornering without triggering harsh cornering event (m/s^2).

Minimum value	Maximum value	Default value	Goes with (depends on) parameters	Value type
0.5	10	2.1	Green driving priority (ID=11000) Max Acceleration Force (ID=11004) Max Braking Force (ID=11005) Green/Eco driving (ID=11007) Green driving digital output control settings (ID=11003) Green driving Digital output on duration (ID=11001) Green driving Digital output off duration (ID=11002)	float

12.6.1.4 Green/Eco driving (ID=11007)

Choose between Eco driving(accelerometer) and Green driving(gps). 0 – GPS, 1 – Accelerometer

Minimum value	Maximum value	Default value	Goes with (depends on) parameters	Value type
0	1	0	Green driving priority (ID=11000) Max Acceleration Force (ID=11004) Max Braking Force (ID=11005) Max Cornering (ID=11006) Green driving digital output control settings (ID=11003) Green driving Digital output on duration (ID=11001) Green driving Digital output off duration (ID=11002)	Uint8

12.6.1.5 Green driving digital output control settings (ID=11003)

0 - Scenario disabled, 1 - No DOUT control, 2 - DOUT1, 3 - DOUT2, 4 - DOUT3, 5 - DOUT4.

Minimum value	Maximum value	Default value	Goes with (depends on) parameters	Value type
0	5	0	Green driving priority	Uint8

			(ID=11000) Max Acceleration Force (ID=11004) Max Braking Force (ID=11005) Max Cornering (ID=11006) Green/Eco driving (ID=11007) Green driving Digital output on duration (ID=11001) Green driving Digital output off duration (ID=11002)	

12.6.1.6 Acceleration Digital output on duration (ID=11009)

Output ON duration in mili-seconds

Minimum value	Maximum value	Default value	Goes with (depends on) parameters	Value type
0.1	10	0.1		float

12.6.1.7 Braking Digital output on duration (ID=11010)

Output ON duration in mili-seconds

Minimum value	Maximum value	Default value	Goes with (depends on) parameters	Value type
0.1	10	0.1		float

12.6.1.8 Cornering Digital output on duration (ID=11011)

Output ON duration in mili-seconds

Minimum value	Maximum value	Default value	Goes with (depends on) parameters	Value type
0.1	10	0.1		float

12.6.2 Overspeeding scenario parameters

12.6.2.1 Max allowed Speed (ID=11104)

It is max allowed speed which can be reached. If this value exceeded Over speeding event will occur.

Minimum value	Maximum value	Default value	Goes with (depends on) parameters	Value type
0	260	90	Overspeeding priority (ID=11100) Overspeeding output control (ID=11103) Overspeeding Digital output on duration (ID=11101) Overspeeding Digital output off duration (ID=11102)	Uint16

12.6.2.2 Overspeeding output control (ID=11103)

0 - Scenario disabled, 1 - No DOUT control, 2 - DOUT1, 3 - DOUT2, 4 - DOUT3, 5 - DOUT4.

Minimum value	Maximum value	Default value	Goes with (depends on) parameters	Value type
0	5	0	Overspeeding priority (ID=11100) Max allowed Speed (ID=11104) Overspeeding Digital output on duration (ID=11101) Overspeeding Digital output off duration (ID=11102)	Uint8

12.6.3 Jamming scenario parameters

12.6.3.1 Jamming Eventual records (ID=11303)

Disables or enables eventual records. 0 – Disable, 1 – Enable

Minimum value	Maximum value	Default value	Goes with (depends on) parameters	Value type
0	1	1	Jamming priority (ID=11300) Jamming Output Control (ID=11304) Time Until Jamming Event Detection(ID=11305) Jamming DOUT on duration [ms] (ID=11301) Jamming DOUT off duration [ms] (ID=11302)	Uint8

12.6.3.2 Jamming Output Control (ID=11304)

0 - Scenario disabled, 1 - No DOUT control, 2 - DOUT1, 3 - DOUT2, 4 - DOUT3, 5 - DOUT4.

Minimum value	Maximum value	Default value	Goes with (depends on) parameters	Value type
0	5	0	Jamming priority (ID=11300) Jamming Eventual records (ID=11303) Time Until Jamming Event Detection(ID=11305) Jamming DOUT on duration [ms] (ID=11301) Jamming DOUT off duration [ms] (ID=11302)	Uint8

12.6.3.3 Jamming Sensitivity Control (ID=11306)

0 - Low, 1 - Normal, 2 - High.

Minimum value	Maximum value	Default value	Goes with (depends on) parameters	Value type
0	2	0		Uint8

12.6.3.4 Time Until Jamming Event Detection(ID=11305)

After Jamming trigger count TMO (in seconds), control OUTPUT and generate event after this timeout. If Jamming End trigger is detected during counting no event will be generated and output will not be controlled.

Minimum value	Maximum value	Default value	Goes with (depends on) parameters	Value type
0	65535	60	Jamming priority (ID=11300) Jamming Eventual records (ID=11303) Jamming Output Control (ID=11304) Jamming DOUT on duration [ms] (ID=11301) Jamming DOUT off duration [ms] (ID=11302)	Uint16

12.6.3.5 Jamming DOUT on duration [ms] (ID=11301)

Sets time period, that Dout will be on.

Minimum value	Maximum value	Default value	Goes with (depends on) parameters	Value type
0	65530	0	Jamming priority (ID=11300) Jamming Eventual records (ID=11303) Jamming Output Control (ID=11304) Time Until Jamming Event Detection(ID=11305) Jamming DOUT off duration [ms] (ID=11302)	Int32

12.6.4 Immobilizer scenario parameters

12.6.4.1 Eventual records (ID=11701)

Disables or enables eventual records. 0 – Disable, 1 – Enable

Minimum value	Maximum value	Default value	Goes with (depends on) parameters	Value type
0	1	1	Scenario settings (ID=11700) Output control (ID=11702) iButton list check (ID=11703)	Uint8

12.6.4.2 Output control (ID=11702)

Defines rather immobilizer will control digital output or not. 0 – Disable, 1 – No DOUT control , 2 – Enable (DOUT1) , 3 - Enable (DOUT2), 4 - Enable (DOUT3) , 5 - Enable (DOUT4)

Minimum value	Maximum value	Default value	Goes with (depends on) parameters	Value type
0	5	0	Scenario settings (ID=11700) Eventual records (ID=11701) iButton list check (ID=11703)	Uint8

12.6.4.3 iButton list check (ID=11703)

iButton list check – option to select if it is necessary to check configured iButton list (1 – Authorized Driving behavior) or not (0 – Immobilizer behavior).

Minimum value	Maximum value	Default value	Goes with (depends on) parameters	Value type
0	1	0	Scenario settings (ID=11700) Eventual records (ID=11701) Output control (ID=11702) iButton List (ID=30000 – 30500)	Uint8

12.6.5 Trip scenario parameters

12.6.5.1 Trip priority (ID=11800)

Defines priority of trip scenario:

0 – disabled, 1 – low, 2 – high, 3 – panic

Minimum value	Maximum value	Default value	Goes with (depends on) parameters	Value type
0	3	0	Eventually Records (ID=11801) Trip mode (ID=11802) Start Speed (ID=11803) Ignition Off Timeout (ID=11804) Eco Score allowed events (ID=700) Odometer distance calculation source (ID=11806)	Uint8

12.6.5.2 Eventually Records (ID=11801)

Disables or enables eventual records. 0 – Disable, 1 – Enable.

Minimum value	Maximum value	Default value	Goes with (depends on) parameters	Value type
0	1	0	Trip priority (ID=11800) Trip mode (ID=11802) Start Speed (ID=11803) Ignition Off Timeout (ID=11804) Eco Score allowed events (ID=700)	Uint8

			Odometer distance calculation source (ID=11806)	

12.6.5.3 Trip mode (ID=11802)

For this feature I/O ODOMETER must be enabled. If I/O ODOMETER is enabled, and mode is set to Continuous (value 0), TRIP distance is going to be counted till the end of trip, if between records mode is set, ODOMETER will count distance only between two records.

Minimum value	Maximum value	Default value	Goes with (depends on) parameters	Value type
0	1	0	Trip priority (ID=11800) Eventually Records (ID=11801) Start Speed (ID=11803) Ignition Off Timeout (ID=11804) Eco Score allowed events (ID=700) Odometer distance calculation source (ID=11806)	Uint8

12.6.5.4 Start Speed (ID=11803)

This parameter represents speed (km/h), which is detected as minimum speed to indicate TRIP START and generate event.

Minimum value	Maximum value	Default value	Goes with (depends on) parameters	Value type
0	255	5	Trip priority (ID=11800) Eventually Records (ID=11801) Trip mode (ID=11802) Ignition Off Timeout (ID=11804) Eco Score allowed events (ID=700) Odometer distance calculation source (ID=11806)	Uint8

12.6.5.5 Ignition Off Timeout (ID=11804)

This parameter represents timeout to wait if ignition (ignition source) is off in order to detect TRIP STOP and generate event.

Minimum value	Maximum value	Default value	Goes with (depends on) parameters	Value type
0	65535	60	Trip priority (ID=11800) Eventually Records (ID=11801) Trip mode (ID=11802) Start Speed (ID=11803) Eco Score allowed events (ID=700) Odometer distance calculation source (ID=11806)	Uint16

12.6.5.6 Total Odometer value (ID=11807)

Sets total odometer value (km).

Minimum value	Maximum value	Default value	Goes with (depends on) parameters	Value type
0	9999999	0	I/O Total Odometer (ID=50160-50164)	Uint32

12.6.5.7 Remember iButton ID (ID=11805)

This parameter enables/disables Remember iButton ID functionality. 0 – disable, 1 – enable.

Minimum value	Maximum value	Default value	Goes with (depends on) parameters	Value type
0	1	0	Trip priority (ID=11800) Eventually Records (ID=11801) Trip mode (ID=11802) Start Speed (ID=11803) Ignition Off Timeout (ID=11804) Eco Score allowed events (ID=700) iButton List (ID=30000 – 30500)	Uint8

12.6.6 iButton read notification

12.6.6.1 Digital Output control (ID=11704)

0 - Scenario disabled, 1 - No DOUT control, 2 - DOUT1, 3 - DOUT2, 4 - DOUT3, 5 - DOUT4.

Minimum value	Maximum value	Default value	Goes with (depends on) parameters	Value type
0	5	0	Duration timeout [ms] (ID=11705)	Uint8

12.6.6.2 Duration timeout [ms] (ID=11705)

DOUT on duration timeout.

Minimum value	Maximum value	Default value	Goes with (depends on) parameters	Value type
100	5000	200	Digital Output control (ID=11704)	Uint8

12.7 AutoGeofencing scenario parameters

12.7.1 AutoGeofencing priority (ID=20000)

Defines priority of autogeofencing scenario:

0 – disabled, 1 – low, 2 – high, 3 – panic

Minimum value	Maximum value	Default value	Goes with (depends on) parameters	Value type
0	3	0	Eventual Records (ID=20002)	Uint8

			Activation Timeout (ID=20003) Deactivate by (ID=20005) AutoGeofence event generating (ID=20001) Radius (ID=20004)	

12.7.2 Eventual Records (ID=20002)

0 – disable, include parameter to all records, 1 – enable, include parameter to record only if event was generated.

Minimum value	Maximum value	Default value	Goes with (depends on) parameters	Value type
0	1	1	AutoGeofencing priority (ID=20000) Activation Timeout (ID=20003) Deactivate by (ID=20005) AutoGeofence event generating (ID=20001) Radius (ID=20004)	Uint8

12.7.3 Activation Timeout (ID=20003)

Parameter represents AutoGeofencing activation timeout in seconds.

Minimum value	Maximum value	Default value	Goes with (depends on) parameters	Value type
0	65535	60	AutoGeofencing priority (ID=20000) Eventual Records (ID=20002) Deactivate by (ID=20005) AutoGeofence event generating (ID=20001) Radius (ID=20004)	Uint16

12.7.4 Deactivate by (ID=20005)

Parameter defines Autogeofence deactivation source. Value 0 - Ignition, 1 - iButton.

Minimum value	Maximum value	Default value	Goes with (depends on) parameters	Value type
0	1	0	AutoGeofencing priority (ID=20000) Eventual Records (ID=20002) Activation Timeout (ID=20003) AutoGeofence event generating (ID=20001) Radius (ID=20004) iButton List (ID=30000 – 30500)	Uint8

12.7.5 AutoGeofence event generating (ID=20001)

Generate event: 0 – on exiting zone , 1 – on entering zone; 2 – on both;

Minimum value	Maximum value	Default value	Goes with (depends on) parameters	Value type
0	2	0	AutoGeofencing priority (ID=20000) Eventual Records (ID=20002) Activation Timeout (ID=20003) Deactivate by (ID=20005) Radius (ID=20004)	Uint8

12.7.6 Radius (ID=20004)

Parameter represents radius of circle with center device coordinates after activating AutoGeofence feature.

Minimum value	Maximum value	Default value	Goes with (depends on) parameters	Value type
0	1000000	100	AutoGeofencing priority (ID=20000) Eventual Records (ID=20002) Activation Timeout (ID=20003) Deactivate by (ID=20005) AutoGeofence event generating (ID=20001)	Uint32

12.8 Manual Geofence

12.8.1 First Geozone parameters

First Geozone parameters configuration. All 50 geozones are configured with the same logic.

12.8.1.1 #1 Geozone Manual Geofencing priority (ID=20100)

0 – disabled, 1 – low, 2 – high, 3 – panic

Minimum value	Maximum value	Default value	Goes with (depends on) parameters	Value type
0	3	0	#1 Geozone Manual Geofence event generating (ID=20101) #1 Geozone Eventual Records (ID=20102) #1 Geozone Frame border (ID=20103) #1 Geozone Shape type (ID=20104) #1 Geozone Radius (ID=20105) #1 Geozone X1 (ID=20106) #1 Geozone Y1 (ID=20107) #1 Geozone X2 (ID=20108) #1 Geozone X1 (ID=20109) #1 Geozone OverSpeeding	Uint8

			(ID=20110) #1 Geozone Max allowed speed (ID=20111)	

12.8.1.2 #1 Geozone Manual Geofence event generating (ID=20101)

Generate event: 0 – No event, 1 - on exiting zone, 2 – on entering zone; 3 – on both;

Minimum value	Maximum value	Default value	Goes with (depends on) parameters	Value type
0	3	0	#1 Geozone Manual Geofencing priority (ID=20100) #1 Geozone Eventual Records (ID=20102) #1 Geozone Frame border (ID=20103) #1 Geozone Shape type (ID=20104) #1 Geozone Radius (ID=20105) #1 Geozone X1 (ID=20106) #1 Geozone Y1 (ID=20107) #1 Geozone X2 (ID=20108) #1 Geozone X1 (ID=20109) #1 Geozone OverSpeeding (ID=20110) #1 Geozone Max allowed speed (ID=20111)	Uint8

12.8.1.3 #1 Geozone Eventual Records (ID=20102)

0 – disable, include parameter to all records, 1 – enable, include parameter to record only if event was generated.

Minimum value	Maximum value	Default value	Goes with (depends on) parameters	Value type
0	1	1	#1 Geozone Manual Geofencing priority (ID=20100) #1 Geozone Manual Geofence event generating (ID=20101) #1 Geozone Frame border (ID=20103) #1 Geozone Shape type (ID=20104) #1 Geozone Radius (ID=20105) #1 Geozone X1 (ID=20106) #1 Geozone Y1 (ID=20107) #1 Geozone X2 (ID=20108) #1 Geozone X1 (ID=20109) #1 Geozone OverSpeeding (ID=20110)	Uint8

			#1 Geozone Max allowed speed (ID=20111)	

12.8.1.4 #1 Geozone Frame border (ID=20103)

Frame border is an additional border around Geofence zone.

Minimum value	Maximum value	Default value	Goes with (depends on) parameters	Value type
0	1000000	1	#1 Geozone Manual Geofencing priority (ID=20100) #1 Geozone Manual Geofence event generating (ID=20101) #1 Geozone Eventual Records (ID=20102) #1 Geozone Shape type (ID=20104) #1 Geozone Radius (ID=20105) #1 Geozone X1 (ID=20106) #1 Geozone Y1 (ID=20107) #1 Geozone X2 (ID=20108) #1 Geozone X1 (ID=20109) #1 Geozone OverSpeeding (ID=20110) #1 Geozone Max allowed speed (ID=20111)	Uint32

12.8.1.5 #1 Geozone Shape type (ID=20104)

Shape type: 0 – Circle, 1 - Rectangle.

Minimum value	Maximum value	Default value	Goes with (depends on) parameters	Value type
0	1	0	#1 Geozone Manual Geofencing priority (ID=20100) #1 Geozone Manual Geofence event generating (ID=20101) #1 Geozone Eventual Records (ID=20102) #1 Geozone Frame border (ID=20103) #1 Geozone Radius (ID=20105) #1 Geozone X1 (ID=20106) #1 Geozone Y1 (ID=20107) #1 Geozone X2 (ID=20108) #1 Geozone X1 (ID=20109) #1 Geozone OverSpeeding (ID=20110) #1 Geozone Max allowed speed (ID=20111)	Uint8

12.8.1.6 #1 Geozone Radius (ID=20105)

Radius of circle when circular zone is used (radius in meters).

Minimum value	Maximum value	Default value	Goes with (depends on) parameters	Value type
5	1000000	5	#1 Geozone Manual Geofencing priority (ID=20100) #1 Geozone Manual Geofence event generating (ID=20101) #1 Geozone Eventual Records (ID=20102) #1 Geozone Frame border (ID=20103) #1 Geozone Shape type (ID=20104) #1 Geozone X1 (ID=20106) #1 Geozone Y1 (ID=20107) #1 Geozone X2 (ID=20108) #1 Geozone X1 (ID=20109) #1 Geozone OverSpeeding (ID=20110) #1 Geozone Max allowed speed (ID=20111)	Uint32

12.8.1.7 #1 Geozone X1 (ID=20106)

Geofence zone left bottom corner X coordinate (longitude).

Minimum value	Maximum value	Default value	Goes with (depends on) parameters	Value type
-180	180	0	#1 Geozone Manual Geofencing priority (ID=20100) #1 Geozone Manual Geofence event generating (ID=20101) #1 Geozone Eventual Records (ID=20102) #1 Geozone Frame border (ID=20103) #1 Geozone Shape type (ID=20104) #1 Geozone Radius (ID=20105) #1 Geozone Y1 (ID=20107) #1 Geozone X2 (ID=20108) #1 Geozone X1 (ID=20109) #1 Geozone OverSpeeding (ID=20110) #1 Geozone Max allowed speed (ID=20111)	Double

12.8.1.8 #1 Geozone Y1 (ID=20107)

Geofence zone left bottom corner Y coordinate (latitude).

Minimum value	Maximum value	Default value	Goes with (depends on) parameters	Value type
-90	90	0	#1 Geozone Manual Geofencing priority (ID=20100) #1 Geozone Manual Geofence event generating (ID=20101) #1 Geozone Eventual Records (ID=20102) #1 Geozone Frame border (ID=20103) #1 Geozone Shape type (ID=20104) #1 Geozone Radius (ID=20105) #1 Geozone X1 (ID=20106) #1 Geozone X2 (ID=20108) #1 Geozone X1 (ID=20109) #1 Geozone OverSpeeding (ID=20110) #1 Geozone Max allowed speed (ID=20111)	Double

12.8.1.9 #1 Geozone X2 (ID=20108)

Geofence zone upper right corner X coordinate (longitude).

Minimum value	Maximum value	Default value	Goes with (depends on) parameters	Value type
-180	180	0	#1 Geozone Manual Geofencing priority (ID=20100) #1 Geozone Manual Geofence event generating (ID=20101) #1 Geozone Eventual Records (ID=20102) #1 Geozone Frame border (ID=20103) #1 Geozone Shape type (ID=20104) #1 Geozone Radius (ID=20105) #1 Geozone X1 (ID=20106) #1 Geozone Y1 (ID=20107) #1 Geozone X1 (ID=20109) #1 Geozone OverSpeeding (ID=20110) #1 Geozone Max allowed speed (ID=20111)	Double

12.8.1.10 #1 Geozone X1 (ID=20109)

Geofence zone upper right corner Y coordinate (latitude).

Minimum value	Maximum value	Default value	Goes with (depends on) parameters	Value type
-90	90	0	#1 Geozone Manual Geofencing priority (ID=20100) #1 Geozone Manual Geofence event generating (ID=20101) #1 Geozone Eventual Records (ID=20102) #1 Geozone Frame border (ID=20103) #1 Geozone Shape type (ID=20104) #1 Geozone Radius (ID=20105) #1 Geozone X1 (ID=20106) #1 Geozone Y1 (ID=20107) #1 Geozone X2 (ID=20108) #1 Geozone OverSpeeding (ID=20110) #1 Geozone Max allowed speed (ID=20111)	Double

12.8.1.11 #1 Geozone OverSpeeding DOUT control (ID=20110)

Enable/disable overspeeding event in geozone. 0 - Disable, 1 - No DOUT control, 2 - DOUT1, 3 - DOUT2, 4 - DOUT3, 5 - DOUT4.

Minimum value	Maximum value	Default value	Goes with (depends on) parameters	Value type
0	5	0		Uint8

12.8.1.12 #1 Geozone Max allowed speed (ID=20111)

It is max allowed speed which can be reached in geozone (km/h).

Minimum value	Maximum value	Default value	Goes with (depends on) parameters	Value type
0	1000	90	#1 Geozone Manual Geofencing priority (ID=20100) #1 Geozone Manual Geofence event generating (ID=20101) #1 Geozone Eventual Records (ID=20102) #1 Geozone Frame border (ID=20103) #1 Geozone Shape type (ID=20104) #1 Geozone Radius (ID=20105) #1 Geozone X1 (ID=20106)	Uint16

			#1 Geozone Y1 (ID=20107) #1 Geozone X2 (ID=20108) #1 Geozone X1 (ID=20109) #1 Geozone OverSpeeding (ID=20110)	

12.8.2 Other Geozones

Other Geozone's parameters have the same logic as shown in Geozone #1.

GeoFence Zone Number	Geofence Zone's parameters
1	20100-20111
2	20120-20131
3	20140-20151
…	…
49	21060-21071
50	21080-21091

12.9 Accelerometer Features

12.9.1 Towing Detection

12.9.1.1 Scenario setting (ID=11600)

0 – disabled, 1 – low, 2 – high, 3 – panic

Minimum value	Maximum value	Default value	Goes with (depends on) parameters	Value type
0	3	0	Eventual Records (ID=11601) Activation Timeout (min) (ID=11602) Event Timeout (s) (ID=11603) Make Call(Sms Event Number ID) (ID=11604) Treshold (mg) (ID=11605) Angle (deg) (ID=11606) Duration (msec) (ID=11607)	Uint8

12.9.1.2 Eventual Records (ID=11601)

Generate event: 0 – disable; 1 – enable.

Minimum value	Maximum value	Default value	Goes with (depends on) parameters	Value type
0	1	1	Scenario setting (ID=11600) Activation Timeout (min) (ID=11602) Event Timeout (s) (ID=11603) Make Call(Sms Event Number ID) (ID=11604)	Uint8

			Treshold (mg) (ID=11605) Angle (deg) (ID=11606) Duration (msec) (ID=11607)	

12.9.1.3 Activation Timeout (min) (ID=11602)

Activation timeout is time after which FMB640 turns ON Towing detection function if other requirement is met (Ignition OFF state detected).

Minimum value	Maximum value	Default value	Goes with (depends on) parameters	Value type
0	65535	5	Scenario setting (ID=11600) Eventual Records (ID=11601) Event Timeout (s) (ID=11603) Make Call(Sms Event Number ID) (ID=11604) Treshold (mg) (ID=11605) Angle (deg) (ID=11606) Duration (msec) (ID=11607)	Uint16

12.9.1.4 Event Timeout (s) (ID=11603)

Defines time period (in second) to check ignition state when Acceleration or Angle value reach. If towing event is generated during this time period, it is skipped. It allows to filter out redundant towing event while entering car.

Minimum value	Maximum value	Default value	Goes with (depends on) parameters	Value type
0	60	0	Scenario setting (ID=11600) Eventual Records (ID=11601) Activation Timeout (min) (ID=11602) Make Call(Sms Event Number ID) (ID=11604) Treshold (mg) (ID=11605) Angle (deg) (ID=11606) Duration (msec) (ID=11607)	Uint8

12.9.1.5 Treshold (mg) (ID=11605)

Value used to detect towing when ignition is OFF.

Minimum value	Maximum value	Default value	Goes with (depends on) parameters	Value type
0.1	5	0.22	Scenario setting (ID=11600) Eventual Records (ID=11601) Activation Timeout (min) (ID=11602) Event Timeout (s) (ID=11603) Make Call(Sms Event Number ID) (ID=11604) Angle (deg) (ID=11606) Duration (msec) (ID=11607)	Double

12.9.1.6 Angle (deg) (ID=11606)

Value used to detect towing when ignition is OFF.

Minimum value	Maximum value	Default value	Goes with (depends on) parameters	Value type
0.1	5	1	Scenario setting (ID=11600) Eventual Records (ID=11601) Activation Timeout (min) (ID=11602) Event Timeout (s) (ID=11603) Make Call(Sms Event Number ID) (ID=11604) Treshold (mg) (ID=11605) Duration (msec) (ID=11607)	Double

12.9.1.7 Make Call To (ID=11604)

Defines time period to check Acceleration, angle values.

Minimum value	Maximum value	Default value	Goes with (depends on) parameters	Value type
0	10	0		Uint8

12.9.1.8 Duration (msec) (ID=11607)

Defines time period to check Acceleration, angle values.

Minimum value	Maximum value	Default value	Goes with (depends on) parameters	Value type
1	5000	1000	Scenario setting (ID=11600) Eventual Records (ID=11601) Activation Timeout (min) (ID=11602) Event Timeout (s) (ID=11603) Make Call(Sms Event Number ID) (ID=11604) Treshold (mg) (ID=11605) Angle (deg) (ID=11606)	Uint16

12.9.2 Crash Detection

12.9.2.1 Scenario settings (ID=11400)

Sets priority of the scenario: 0 – Disable, 1 – Low Priority, 2 – High Priority, 3 – Panic Priority

Minimum value	Maximum value	Default value	Goes with (depends on) parameters	Value type
0	3	0	Duration [ms] (ID=11401) Treshold [mG] (ID=11402)	Uint8

12.9.2.2 Duration [ms] (ID=11401)

Minimum	Maximum	Default value	Goes with (depends on)	Value

value	value		parameters	type
0	1000	5	Scenario settings (ID=11400) Treshold [mG] (ID=11402)	Uint8

12.9.2.3 Treshold [mG] (ID=11402)

Minimum value	Maximum value	Default value	Goes with (depends on) parameters	Value type
0	7900	1500	Scenario settings (ID=11400) Duration [ms] (ID=11401)	Uint16

12.9.3 Excessive idling

12.9.3.1 Excessive idling priority (ID=11200)

Defines priority of Excessive idling scenario:

0 – disabled, 1 – low, 2 – high, 3 – panic

Minimum value	Maximum value	Default value	Goes with (depends on) parameters	Value type
0	3	0	Eventual records (ID=11203) Excessive idling minimum stop duration (ID=11205) Excessive idling minimum move duration (ID=11206)	Uint8

12.9.3.2 Eventual records (ID=11203)

Disables (0) or enables (1) eventual records with idling value.

Minimum value	Maximum value	Default value	Goes with (depends on) parameters	Value type
0	1	1	Excessive idling priority (ID=11200) Excessive idling minimum stop duration (ID=11205) Excessive idling minimum move duration (ID=11206)	UInt8

12.9.3.3 Excessive idling time to stopped (ID=11205)

Defines minimum time in seconds of vehicle idling before scenario enables.

Minimum value	Maximum value	Default value	Goes with (depends on) parameters	Value type
0	3600	300	Excessive idling priority (ID=11200) Eventual records (ID=11203) Excessive idling minimum move duration (ID=11206)	UInt8

Excessive idling time to moving (ID=11206)

Defines minimum time in seconds of vehicle idling before scenario disables.

Minimum value	Maximum value	Default value	Goes with (depends on) parameters	Value type
0	3600	5	Excessive idling priority (ID=11200) Eventual records (ID=11203) Excessive idling minimum stop duration (ID=11205)	UInt8

12.10 Blue-tooth

12.10.1.1 BT Radio (ID=800)

Enables or disable Blue-tooth feature. 0 – Disabled, 1 – Enable hidden, 2 – Enable visible

Minimum value	Maximum value	Default value	Goes with (depends on) parameters	Value type
0	2	0		Uint8

12.11 iButton List (ID=30000 – 30500)

List of 500 authorized iButtons' IDs.

Minimum value	Maximum value	Default value	Goes with (depends on) parameters	Value type
0	FFFFFFFF FFFFFFFF	0	Deactivate by (ID=20005) iButton list check (ID=11703) Remember iButton ID (ID=11805)	Uint64

12.12 I/O parameters

I/O properties are additional data sources which are recorded along with usual GPS data.

12.12.1 I/O#1 property parameter priority Ignition (ID=50000)

Parameter defines I/O property type of priority: 0 is disabled, 1 – low, 2 – high, 3 - panic.

Minimum value	Maximum value	Default value	Goes with (depends on) parameters	Value type
0	3	1	I/O#1 operand (ID=50001) I/O#1 High level (ID=50002) I/O#1 Low level (ID=50003) I/O#1 Event only (ID=50004) I/O#1 averaging length (ID=50005)	Uint8

12.12.2 I/O#1 operand (ID=50001)

Parameter defines when event is sent: 0 – on range exit, 1 – on range entrance, 2 – both, 3 – monitoring, 4 – hysteresis, 5 – on changes, 6 – on delta change.

Minimum value	Maximum value	Default value	Goes with (depends on) parameters	Value type
0	6	0	I/O#1 property parameter priority Ignition (ID=50000) I/O#1 High level (ID=50002) I/O#1 Low level (ID=50003) I/O#1 Event only (ID=50004) I/O#1 averaging length (ID=50005)	Uint8

12.12.3 I/O#1 High level (ID=50002)

Parameter defines high value of triggered I/O property. This parameter is used to set thresholds for I/O properties to generate events.

Minimum value	Maximum value	Default value	Goes with (depends on) parameters	Value type
0	1	0	I/O#1 property parameter priority Ignition (ID=50000) I/O#1 operand (ID=50001) I/O#1 Low level (ID=50003) I/O#1 Event only (ID=50004) I/O#1 averaging length (ID=50005)	Uint8

12.12.4 I/O#1 Low level (ID=50003)

Parameter defines low value of triggered I/O property. This parameter is used to set thresholds for I/O properties to generate events.

Minimum value	Maximum value	Default value	Goes with (depends on) parameters	Value type
0	1	0	I/O#1 property parameter priority Ignition (ID=50000) I/O#1 operand (ID=50001) I/O#1 High level (ID=50002) I/O#1 Event only (ID=50004) I/O#1 averaging length (ID=50005)	Uint8

12.12.5 I/O#1 Event only (ID=50004)

Parameter defines when IO element value is sent: 0 – with every AVL packet, 1 – on event only. On event means that IO element value is included to AVL packet only when this particular event happens. With regular, periodic records such IO element value is not included.

Minimal value	Maximum value	Default value	Goes with (depends on) parameters	Value type
0	1	0	I/O#1 property parameter priority Ignition (ID=50000) I/O#1 operand (ID=50001) I/O#1 High level (ID=50002) I/O#1 Low level (ID=50003) I/O#1 averaging length (ID=50005)	Uint8

12.12.6 I/O#1 averaging length (ID=50005)

Parameter defines I/O property sample length to average.

Minimum value	Maximum value	Default value	Goes with (depends on) parameters	Value type
0	65535	10	I/O#1 property parameter priority Ignition (ID=50000) I/O#1 operand (ID=50001) I/O#1 High level (ID=50002) I/O#1 Low level (ID=50003) I/O#1 Event only (ID=50004)	Uint16

12.12.7 I\O elements parameters and types.

Priority: 0 – disabled, 1 – low, 2 – high, 3 – panic.

Operand: 0 – On Exit, 1 – On Entrance, 2 – On Both, 3 – Monitoring, 4 – On Hysteresis, 5 – On Change, 6 – On Delta Change.

Event only: 0 – No, 1 – Yes.

Table 20. IO Parameters for FMB640 devices

Parameter ID	Parameter Type	Default value	Value range		Parameter name
			Min	Max	
50000	Uint8	1	0	3	Ignition Priority
50001	Uint8	5	0	6	Ignition Operand
50002	Uint8	0	0	1	Ignition High level
50003	Uint8	0	0	1	Ignition Low level
50004	Uint8	0	0	1	Ignition Event only
50005	Uint16	10	0	65535	Ignition Average
50010	Uint8	1	0	3	Movement Priority
50011	Uint8	5	0	6	Movement Operand
50012	Uint8	0	0	1	Movement High level
50013	Uint8	0	0	1	Movement Low level
50014	Uint8	0	0	1	Movement Event only
50015	Uint16	1	0	65535	Movement Average
50020	Uint8	1	0	3	Data Mode Priority
50021	Uint8	3	0	6	Data Mode Operand
50022	Uint8	0	0	5	Data Mode High level
50023	Uint8	0	0	5	Data Mode Low level
50024	Uint8	0	0	1	Data Mode Event only
50030	Uint8	1	0	3	GSM Signal Priority
50031	Uint8	3	0	6	GSM Signal Operand

Parameter ID	Parameter Type	Default value	Value range		Parameter name
			Min	Max	
50032	Uint8	0	0	5	GSM Signal High level
50033	Uint8	0	0	5	GSM Signal Low level
50034	Uint8	0	0	1	GSM Signal Event only
50035	Uint16	1	0	65535	GSM Signal Average
50040	Uint8	1	0	3	Sleep Mode Priority
50041	Uint8	3	0	6	Sleep Mode Operand
50042	Uint8	0	0	2	Sleep Mode High level
50043	Uint8	0	0	2	Sleep Mode Low level
50044	Uint8	0	0	1	Sleep Mode Event only
50050	Uint8	1	0	3	GNSS Status Priority
50051	Uint8	3	0	6	GNSS Status Operand
50052	Uint8	0	0	5	GNSS Status High level
50053	Uint8	0	0	5	GNSS Status Low level
50053	Uint8	0	0	1	GNSS Status Event only
50060	Uint8	0	0	3	GNSS PDOP Priority
5061	Uint8	3	0	6	GNSS PDOP Operand
5062	Uint16	0	0	1000	GNSS PDOP High level
5063	Uint16	0	0	1000	GNSS PDOP Low level
5064	Uint8	0	0	1	GNSS PDOP Event only
5065	Uint16	10	0	65535	GNSS PDOP Average
50070	Uint8	1	0	3	GNSS HDOP Priority
50071	Uint8	3	0	6	GNSS HDOP Operand
50072	Uint16	0	0	1000	GNSS HDOP High level
50073	Uint16	0	0	1000	GNSS HDOP Low level
50074	Uint8	0	0	1	GNSS HDOP Event only
50075	Uint16	10	0	65535	GNSS HDOP Average
50080	Uint8	1	0	3	External Voltage Priority
50081	Uint8	6	0	6	External Voltage Operand
50082	Uint16	1000	0	60000	External Voltage High level
50083	Uint16	0	0	60000	External Voltage Low level
50084	Uint8	0	0	1	External Voltage Event only
50085	Uint16	10	0	65535	External Voltage Average
50090	Uint8	1	0	3	Speed Priority
50091	Uint8	3	0	6	Speed Operand
50092	Uint16	0	0	300	Speed High level
50093	Uint16	0	0	300	Speed Low level
50094	Uint8	0	0	1	Speed Event only
50095	Uint16	1	0	65535	Speed Average
50100	Uint8	0	0	3	GSM Cell ID Priority
50101	Uint8	3	0	6	GSM Cell ID Operand
50102	Uint32	0	0	999999	GSM Cell ID High level
50103	Uint32	0	0	999999	GSM Cell ID Low level
50104	Uint8	0	0	1	GSM Cell ID Event only
50110	Uint8	0	0	3	GSM Area Code Priority
50111	Uint8	3	0	6	GSM Area Code Operand
50112	Uint32	0	0	999999	GSM Area Code High level
50113	Uint32	0	0	999999	GSM Area Code Low level
50114	Uint8	0	0	1	GSM Area Code Event only
50120	Uint8	1	0	3	Battery Voltage Priority

Parameter ID	Parameter Type	Default value	Value range		Parameter name
			Min	Max	
50121	Uint8	3	0	6	Battery Voltage Operand
50122	Uint16	0	0	5000	Battery Voltage High level
50123	Uint16	0	0	5000	Battery Voltage Low level
50124	Uint8	0	0	1	Battery Voltage Event only
50125	Uint8	0	0	10	Battery Voltage Average
50130	Uint8	1	0	3	Battery Current Priority
50131	Uint8	3	0	6	Battery Current Operand
50132	Uint16	0	0	5000	Battery Current High level
50133	Uint16	0	0	5000	Battery Current Low level
50134	Uint8	0	0	1	Battery Current Event only
50135	Uint8	0	0	10	Battery Current Average
50140	Uint8	0	0	3	Active GSM Operator Priority
50141	Uint8	3	0	6	Active GSM Operator Operand
50142	Uint32	0	0	999999	Active GSM Operator High level
50143	Uint32	0	0	999999	Active GSM Operator Low level
50144	Uint8	0	0	1	Active GSM Operator Event only
50150	Uint8	0	0	3	Trip Odometer Priority
50151	Uint8	3	0	6	Trip Odometer Operand
50152	Uint32	0	0	1000000	Trip Odometer High level
50153	Uint32	0	0	1000000	Trip Odometer Low level
50154	Uint8	0	0	1	Trip Odometer Event only
50160	Uint8	0	0	3	Total Odometer Priority
50161	Uint8	3	0	6	Total Odometer Operand
50162	Uint32	0	0	10000000	Total Odometer High level
50163	Uint32	0	0	10000000	Total Odometer Low level
50164	Uint8	0	0	1	Total Odometer Event only
50170	Uint8	0	0	3	Digital Input 1 Priority
50171	Uint8	3	0	6	Digital Input 1 Operand
50172	Uint8	0	0	1	Digital Input 1 High level
50173	Uint8	0	0	1	Digital Input 1 Low level
50174	Uint8	0	0	1	Digital Input 1 Event only
50175	Uint16	1	0	65535	Digital Input 1 Average
50270	Uint8	0	0	3	Digital Input 2 Priority
50271	Uint8	3	0	6	Digital Input 2 Operand
50272	Uint8	0	0	1	Digital Input 2 High level
50273	Uint8	0	0	1	Digital Input 2 Low level
50274	Uint8	0	0	1	Digital Input 2 Event only
50275	Uint16	1	0	65535	Digital Input 2 Average
50280	Uint8	0	0	3	Digital Input 3 Priority
50281	Uint8	3	0	6	Digital Input 3 Operand
50282	Uint8	0	0	1	Digital Input 3 High level
50283	Uint8	0	0	1	Digital Input 3 Low level
50284	Uint8	0	0	1	Digital Input 3 Event only
50285	Uint16	1	0	65535	Digital Input 3 Average
50660	Uint8	0	0	3	Digital Input 4 Priority
50661	Uint8	3	0	6	Digital Input 4 Operand
50662	Uint8	0	0	1	Digital Input 4 High level
50663	Uint8	0	0	1	Digital Input 4 Low level
50664	Uint8	0	0	1	Digital Input 4 Event only

Parameter ID	Parameter Type	Default value	Value range		Parameter name
			Min	Max	
50665	Uint16	1	0	65535	Digital Input 4 Average
50180	Uint8	0	0	3	Analog Input 1 Priority
50181	Uint8	3	0	6	Analog Input 1 Operand
50182	Uint16	0	0	30000	Analog Input 1 High level
50183	Uint16	0	0	30000	Analog Input 1 Low level
50184	Uint8	0	0	1	Analog Input 1 Event only
50185	Uint16	10	0	65535	Analog Input 1 Average
50290	Uint8	0	0	3	Analog Input 2 Priority
50291	Uint8	3	0	6	Analog Input 2 Operand
50292	Uint16	0	0	30000	Analog Input 2 High level
50293	Uint16	0	0	30000	Analog Input 2 Low level
50294	Uint8	0	0	1	Analog Input 2 Event only
50295	Uint16	10	0	65535	Analog Input 2 Average
50670	Uint8	0	0	3	Analog Input 3 Priority
50671	Uint8	3	0	6	Analog Input 3 Operand
50672	Uint16	0	0	30000	Analog Input 3 High level
50673	Uint16	0	0	30000	Analog Input 3 Low level
50674	Uint8	0	0	1	Analog Input 3 Event only
50675	Uint16	10	0	65535	Analog Input 3 Average
50680	Uint8	0	0	3	Analog Input 4 Priority
50681	Uint8	3	0	6	Analog Input 4 Operand
50682	Uint16	0	0	30000	Analog Input 4 High level
50683	Uint16	0	0	30000	Analog Input 4 Low level
50684	Uint8	0	0	1	Analog Input 4 Event only
50685	Uint16	10	0	65535	Analog Input 4 Average
50190	Uint8	0	0	3	Digital Output 1 Priority
50191	Uint8	0	0	6	Digital Output 1 Operand
50192	Uint8	0	0	1	Digital Output 1 High level
50193	Uint8	0	0	1	Digital Output 1 Low level
50194	Uint8	0	0	1	Digital Output 1 Event only
50195	Uint16	1	0	65535	Digital Output 1 Average
50300	Uint8	0	0	3	Digital Output 2 Priority
50301	Uint8	0	0	6	Digital Output 2 Operand
50302	Uint8	0	0	1	Digital Output 2 High level
50303	Uint8	0	0	1	Digital Output 2 Low level
50304	Uint8	0	0	1	Digital Output 2 Event only
50305	Uint16	1	0	65535	Digital Output 2 Average
50690	Uint8	0	0	3	Digital Output 3 Priority
50691	Uint8	0	0	6	Digital Output 3 Operand
50692	Uint8	0	0	1	Digital Output 3 High level
50693	Uint8	0	0	1	Digital Output 3 Low level
50694	Uint8	0	0	1	Digital Output 3 Event only
50695	Uint16	1	0	65535	Digital Output 3 Average
50700	Uint8	0	0	3	Digital Output 4 Priority
50701	Uint8	0	0	6	Digital Output 4 Operand
50702	Uint8	0	0	1	Digital Output 4 High level
50703	Uint8	0	0	1	Digital Output 4 Low level
50704	Uint8	0	0	1	Digital Output 4 Event only
50705	Uint16	1	0	65535	Digital Output 4 Average

Parameter ID	Parameter Type	Default value	Value range		Parameter name
			Min	Max	
50220	Uint8	0	0	3	Axis X Priority
50221	Uint8	3	0	6	Axis X Operand
50222	Uint16	0	-8000	8000	Axis X High level
50223	Uint16	0	-8000	8000	Axis X Low level
50224	Uint8	0	0	1	Axis X Event only
50225	Uint16	1	0	65535	Axis X Average
50230	Uint8	0	0	3	Axis Y Priority
50231	Uint8	3	0	6	Axis Y Operand
50232	Uint16	0	-8000	8000	Axis Y High level
50233	Uint16	0	-8000	8000	Axis Y Low level
50234	Uint8	0	0	1	Axis Y Event only
50235	Uint16	1	0	65535	Axis Y Average
50240	Uint8	0	0	3	Axis Z Priority
50241	Uint8	3	0	6	Axis Z Operand
50242	Uint16	0	-8000	8000	Axis Z High level
50243	Uint16	0	-8000	8000	Axis Z Low level
50244	Uint8	0	0	1	Axis Z Event only
50245	Uint16	1	0	65535	Axis Z Average
50820	Uint8	0	0	3	IMSI Priority
50821	Uint8	0	0	6	IMSI Operand
50822	Uint8	0	0	1	IMSI Event only
50250	Uint8	0	0	3	ICCID Priority
50251	Uint8	3	0	6	ICCID Operand
50254	Uint8	0	0	1	ICCID Event only
50260	Uint8	0	0	3	SD Status Priority
50261	Uint8	3	0	6	SD Status Operand
50262	Uint8	0	0	1	SD Status High level
50263	Uint8	0	0	1	SD Status Low level
50310	Uint8	0	0	3	Dallas Temperature 1 Priority
50311	Uint8	3	0	6	Dallas Temperature 1 Operand
50312	Int8	0	-55	125	Dallas Temperature 1 High level
50313	Int8	0	-55	125	Dallas Temperature 1 Low level
50314	Uint8	0	0	1	Dallas Temperature 1 Event only
50315	Uint16	0	0	65535	Dallas Temperature 1 Average
50320	Uint8	0	0	3	Dallas Temperature 2 Priority
50321	Uint8	3	0	6	Dallas Temperature 2 Operand
50322	Int8	0	-55	125	Dallas Temperature 2 High level
50323	Int8	0	-55	125	Dallas Temperature 2 Low level
50324	Uint8	0	0	1	Dallas Temperature 2 Event only
50325	Uint16	0	0	65535	Dallas Temperature 2 Average
50330	Uint8	0	0	3	Dallas Temperature 3 Priority
50331	Uint8	3	0	6	Dallas Temperature 3 Operand
50332	Int8	0	-55	125	Dallas Temperature 3 High level
50333	Int8	0	-55	125	Dallas Temperature 3 Low level
50334	Uint8	0	0	1	Dallas Temperature 3 Event only
50335	Uint16	0	0	65535	Dallas Temperature 3 Average
50340	Uint8	0	0	3	Dallas Temperature 4 Priority
50341	Uint8	3	0	6	Dallas Temperature 4 Operand
50342	Int8	0	-55	125	Dallas Temperature 4 High level

Parameter ID	Parameter Type	Default value	Value range		Parameter name
			Min	Max	
50343	Int8	0	-55	125	Dallas Temperature 4 Low level
50344	Uint8	0	0	1	Dallas Temperature 4 Event only
50345	Uint16	0	0	65535	Dallas Temperature 4 Average
50720	Uint8	0	0	3	Dallas Temperature 5 Priority
50721	Uint8	3	0	6	Dallas Temperature 5 Operand
50722	Int8	0	-55	125	Dallas Temperature 5 High level
50723	Int8	0	-55	125	Dallas Temperature 5 Low level
50724	Uint8	0	0	1	Dallas Temperature 5 Event only
50725	Uint16	0	0	65535	Dallas Temperature 5 Average
50750	Uint8	0	0	3	Dallas Temperature 6 Priority
50751	Uint8	3	0	6	Dallas Temperature 6 Operand
50752	Int8	0	-55	125	Dallas Temperature 6 High level
50753	Int8	0	-55	125	Dallas Temperature 6 Low level
50754	Uint8	0	0	1	Dallas Temperature 6 Event only
50755	Uint16	0	0	65535	Dallas Temperature 6 Average
50350	Uint8	0	0	3	Dallas Temperature ID 1 Priority
50351	Uint8	3	0	6	Dallas Temperature ID 1 Operand
50352	Uint32	0	0	999999999	Dallas Temperature ID 1 High level
50353	Uint32	0	0	999999999	Dallas Temperature ID 1 Low level
50354	Uint8	0	0	1	Dallas Temperature ID 1 Event only
50355	Uint16	0	0	65535	Dallas Temperature ID 1 Average
50360	Uint8	0	0	3	Dallas Temperature ID 2 Priority
50361	Uint8	3	0	6	Dallas Temperature ID 2 Operand
50362	Uint32	0	0	999999999	Dallas Temperature ID 2 High level
50363	Uint32	0	0	999999999	Dallas Temperature ID 2 Low level
50364	Uint8	0	0	1	Dallas Temperature ID 2 Event only
50365	Uint16	0	0	65535	Dallas Temperature ID 2 Average
50370	Uint8	0	0	3	Dallas Temperature ID 3 Priority
50371	Uint8	3	0	6	Dallas Temperature ID 3 Operand
50372	Uint32	0	0	999999999	Dallas Temperature ID 3 High level
50373	Uint32	0	0	999999999	Dallas Temperature ID 3 Low level
50374	Uint8	0	0	1	Dallas Temperature ID 3 Event only
50375	Uint16	0	0	65535	Dallas Temperature ID 3 Average
50380	Uint8	0	0	3	Dallas Temperature ID 4 Priority
50381	Uint8	3	0	6	Dallas Temperature ID 4 Operand
50382	Uint32	0	0	999999999	Dallas Temperature ID 4 High level
50383	Uint32	0	0	999999999	Dallas Temperature ID 4 Low level
50384	Uint8	0	0	1	Dallas Temperature ID 4 Event only
50385	Uint16	0	0	65535	Dallas Temperature ID 4 Average
50740	Uint8	0	0	3	Dallas Temperature ID 5 Priority
50741	Uint8	3	0	6	Dallas Temperature ID 5 Operand
50742	Uint32	0	0	999999999	Dallas Temperature ID 5 High level
50743	Uint32	0	0	999999999	Dallas Temperature ID 5 Low level
50744	Uint8	0	0	1	Dallas Temperature ID 5 Event only
50745	Uint16	0	0	65535	Dallas Temperature ID 5 Average
50750	Uint8	0	0	3	Dallas Temperature ID 6 Priority
50751	Uint8	3	0	6	Dallas Temperature ID 6 Operand
50752	Uint32	0	0	999999999	Dallas Temperature ID 6 High level
70753	Uint32	0	0	999999999	Dallas Temperature ID 6 Low level

Parameter ID	Parameter Type	Default value	Value range		Parameter name
			Min	Max	
50754	Uint8	0	0	1	Dallas Temperature ID 6 Event only
50755	Uint16	0	0	65535	Dallas Temperature ID 6 Average
50390	Uint8	0	0	3	iButton Priority
50391	Uint8	3	0	6	iButton Operand
50392	Uint32	0	0	999999999	iButton High level
50393	Uint32	0	0	999999999	iButton Low level
50394	Uint8	0	0	1	iButton Event only
50395	Uint16	0	0	65535	iButton Average
50400	Uint8	0	0	3	RFID Priority
50401	Uint8	3	0	6	RFID Operand
50402	Uint32	0	0	999999999	RFID High level
50403	Uint32	0	0	999999999	RFID Low level
50404	Uint8	0	0	1	RFID Event only
50405	Uint16	1	0	65535	RFID Average
50710	Uint8	0	0	3	RFID2 Priority
50711	Uint8	3	0	6	RFID2 Operand
50712	Uint32	0	0	999999999	RFID2 High level
50713	Uint32	0	0	999999999	RFID2 Low level
50714	Uint8	0	0	1	RFID2 Event only
50715	Uint16	1	0	65535	RFID2 Average
50410	Uint8	0	0	3	LLS1 Fuel Level Priority
50411	Uint8	3	0	6	LLS1 Fuel Level Operand
50412	Uint16	0	0	65535	LLS1 Fuel Level High level
50413	Uint16	0	0	65535	LLS1 Fuel Level Low level
50414	Uint8	0	0	1	LLS1 Fuel Level Event only
50415	Uint16	1	0	65535	LLS1 Fuel Level Average
50420	Uint8	0	0	3	LLS2 Fuel Level Priority
50421	Uint8	3	0	6	LLS2 Fuel Level Operand
50422	Uint16	0	0	65535	LLS2 Fuel Level High level
50423	Uint16	0	0	65535	LLS2 Fuel Level Low level
50424	Uint8	0	0	1	LLS2 Fuel Level Event only
50425	Uint16	1	0	65535	LLS2 Fuel Level Average
50430	Uint8	0	0	3	LLS3 Fuel Level Priority
50431	Uint8	3	0	6	LLS3 Fuel Level Operand
50432	Uint16	0	0	65535	LLS3 Fuel Level High level
50433	Uint16	0	0	65535	LLS3 Fuel Level Low level
50434	Uint8	0	0	1	LLS3 Fuel Level Event only
50435	Uint16	1	0	65535	LLS3 Fuel Level Average
50440	Uint8	0	0	3	LLS4 Fuel Level Priority
50441	Uint8	3	0	6	LLS4 Fuel Level Operand
50442	Uint16	0	0	65535	LLS4 Fuel Level High level
50443	Uint16	0	0	65535	LLS4 Fuel Level Low level
50444	Uint8	0	0	1	LLS4 Fuel Level Event only
50445	Uint16	1	0	65535	LLS4 Fuel Level Average
50450	Uint8	0	0	3	LLS5 Fuel Level Priority
50451	Uint8	3	0	6	LLS5 Fuel Level Operand
50452	Uint16	0	0	65535	LLS5 Fuel Level High level
50453	Uint16	0	0	65535	LLS5 Fuel Level Low level
50454	Uint8	0	0	1	LLS5 Fuel Level Event only

Parameter ID	Parameter Type	Default value	Value range		Parameter name
			Min	Max	
50455	Uint16	1	0	65535	LLS5 Fuel Level Average
50460	Uint8	0	0	3	LLS1 Temperature Priority
50461	Uint8	3	0	6	LLS1 Temperature Operand
50462	Int8	0	-128	127	LLS1 Temperature High level
50463	Int8	0	-128	127	LLS1 Temperature Low level
50464	Uint8	0	0	1	LLS1 Temperature Event only
50465	Uint16	1	0	65535	LLS1 Temperature Average
50470	Uint8	0	0	3	LLS2 Temperature Priority
50471	Uint8	3	0	6	LLS2 Temperature Operand
50472	Int8	0	-128	127	LLS2 Temperature High level
50473	Int8	0	-128	127	LLS2 Temperature Low level
50474	Uint8	0	0	1	LLS2 Temperature Event only
50475	Uint16	1	0	65535	LLS2 Temperature Average
50480	Uint8	0	0	3	LLS3 Temperature Priority
50481	Uint8	3	0	6	LLS3 Temperature Operand
50482	Int8	0	-128	127	LLS3 Temperature High level
50483	Int8	0	-128	127	LLS3 Temperature Low level
50484	Uint8	0	0	1	LLS3 Temperature Event only
50485	Uint16	1	0	65535	LLS3 Temperature Average
50490	Uint8	0	0	3	LLS4 Temperature Priority
50491	Uint8	3	0	6	LLS4 Temperature Operand
50492	Int8	0	-128	127	LLS4 Temperature High level
50493	Int8	0	-128	127	LLS4 Temperature Low level
50494	Uint8	0	0	1	LLS4 Temperature Event only
50495	Uint16	1	0	65535	LLS4 Temperature Average
50500	Uint8	0	0	3	LLS5 Temperature Priority
50501	Uint8	3	0	6	LLS5 Temperature Operand
50502	Int8	0	-128	127	LLS5 Temperature High level
50503	Int8	0	-128	127	LLS5 Temperature Low level
50504	Uint8	0	0	1	LLS5 Temperature Event only
50505	Uint16	1	0	65535	LLS5 Temperature Average
50780	Uint8	0	0	3	Ultrasonic UL202 Fuel level 1 Priority
50781	Uint8	3	0	6	Ultrasonic UL202 Fuel level 1 Operand
50782	Uint16	0	-20	32767	Ultrasonic UL202 Fuel level 1 High level
50783	Uint16	0	-20	32767	Ultrasonic UL202 Fuel level 1 Low level
50784	Uint8	0	0	1	Ultrasonic UL202 Fuel level 1 Event only
50785	Uint16	1	0	65535	Ultrasonic UL202 Fuel level 1 Average
50790	Uint8	0	0	3	Ultrasonic UL202 Fuel level 2 Priority
50791	Uint8	3	0	6	Ultrasonic UL202 Fuel level 2 Operand
50792	Uint16	0	-20	32767	Ultrasonic UL202 Fuel level 2 High level

Parameter ID	Parameter Type	Default value	Value range		Parameter name
			Min	Max	
50793	Uint16	0	-20	32767	Ultrasonic UL202 Fuel level 2 Low level
50794	Uint8	0	0	1	Ultrasonic UL202 Fuel level 2 Event only
50795	Uint16	1	0	65535	Ultrasonic UL202 Fuel level 2 Average
50800	Uint8	0	0	3	Ultrasonic UL202 Status 1 Priority
50801	Uint8	3	0	6	Ultrasonic UL202 Status 1 Operand
50802	Uint8	0	0	255	Ultrasonic UL202 Status 1 High level
50803	Uint8	0	0	255	Ultrasonic UL202 Status 1 Low level
50804	Uint8	0	0	1	Ultrasonic UL202 Status 1 Event only
50805	Uint16	1	0	65535	Ultrasonic UL202 Status 1 Average
50810	Uint8	0	0	3	Ultrasonic UL202 Status 2 Priority
50811	Uint8	3	0	6	Ultrasonic UL202 Status 2 Operand
50812	Uint8	0	0	255	Ultrasonic UL202 Status 2 High level
50813	Uint8	0	0	255	Ultrasonic UL202 Status 2 Low level
50814	Uint8	0	0	1	Ultrasonic UL202 Status 2 Event only
50815	Uint16	1	0	65535	Ultrasonic UL202 Status 2 Average
50650	Uint8	0	0	3	Network type Priority
50651	Uint8	3	0	6	Network type Operand
50652	UInt8	0	0	2	Network type High level
50653	UInt8	0	0	2	Network type Low level
50654	Uint8	0	0	1	Network type Event only

12.13 LVCAN

12.13.1 LVCAN Mode (ID = 45000)

Sets LVCAN mode: 0 – Auto Detect, 1 – LV-CAN200, 2 – ALL-CAN300.

Minimum value	Maximum value	Default value	Goes with (depends on) parameters	Value type
0	2	0	Send data with 0, if ignition is off (ID = 45001) Program Number (ID = 45002)	Uint8

12.13.2 Send data with 0, if ignition is off (ID = 45001)

This parameter enables/disables data sending with 0 value, if ignition is off. 0 – Disable, 1 – Enable.

Minimum value	Maximum value	Default value	Goes with (depends on) parameters	Value type
0	1	0	LVCAN Mode (ID = 45000)	Uint8

			Program Number (ID = 45002)	

12.13.3 Program Number (ID = 45002)

Sets LVCAN Program number.

Minimum value	Maximum value	Default value	Goes with (depends on) parameters	Value type
0	999	0	LVCAN Mode (ID = 45000) Send data with 0, if ignition is off (ID = 45001)	Uint16

12.13.4 1st LVCAN property parameter priority (ID=45100)

Parameter defines LVCAN property type of priority: 0 is disabled, 1 – low, 2 – high, 3 - panic.

Minimum value	Maximum value	Default value	Goes with (depends on) parameters	Value type
0	3	0	1st LVCAN property parameter operand (ID=45101) 1st LVCAN property parameter High level (ID=45102) 1st LVCAN property parameter Low level (ID=45103) 1st LVCAN property parameter Event only (ID=45104) 1st LVCAN property parameter averaging constant (ID=45105)	Uint8

12.13.5 1st LVCAN property parameter operand (ID=45101)

Parameter defines when event is sent: 0 – on range exit, 1 – on range entrance, 2 – both, 3 – monitoring, 4 – hysteresis, 5 – on changes, 6 – on delta change.

Minimum value	Maximum value	Default value	Goes with (depends on) parameters	Value type
0	6	3	1st LVCAN property parameter priority (ID=45100) 1st LVCAN property parameter High level (ID=45102) 1st LVCAN property parameter Low level (ID=45103) 1st LVCAN property parameter Event only (ID=45104) 1st LVCAN property parameter averaging constant (ID=45105)	Uint8

12.13.6 1st LVCAN property parameter High level (ID=45102)

Parameter defines high value of triggered LVCAN property. This parameter is used to set thresholds for LVCAN properties to generate events.

Minimum	Maximum	Default value	Goes with (depends on)	Value

value	value		parameters	type
0	255	0	1st LVCAN property parameter priority (ID=45100) 1st LVCAN property parameter operand (ID=45101) 1st LVCAN property parameter Low level (ID=45103) 1st LVCAN property parameter Event only (ID=45104) 1st LVCAN property parameter averaging constant (ID=45105)	Uint8

12.13.7 1st LVCAN property parameter Low level (ID=45103)

Parameter defines low value of triggered LVCAN property. This parameter is used to set thresholds for LVCAN properties to generate events.

Minimum value	Maximum value	Default value	Goes with (depends on) parameters	Value type
0	255	0	1st LVCAN property parameter priority (ID=45100) 1st LVCAN property parameter operand (ID=45101) 1st LVCAN property parameter High level (ID=45102) 1st LVCAN property parameter Event only (ID=45104) 1st LVCAN property parameter averaging constant (ID=45105)	Uint8

12.13.8 1st LVCAN property parameter Event only (ID=45104)

Parameter defines when LVCAN element value is sent: 0 – with every AVL packet, 1 – on event only. On event means that LVCAN element value is included to AVL packet only when this particular event happens. With regular, periodic records such LVCAN element value is not included.

Minimal value	Maximum value	Default value	Goes with (depends on) parameters	Value type
0	1	0	1st LVCAN property parameter priority (ID=45100) 1st LVCAN property parameter operand (ID=45101) 1st LVCAN property parameter High level (ID=45102) 1st LVCAN property parameter Low level (ID=45103) 1st LVCAN property parameter averaging constant (ID=45105)	Uint8

12.13.9 1st LVCAN property parameter averaging constant (ID=45105)

Parameter defines LVCAN property sample length to average.

Minimum value	Maximum value	Default value	Goes with (depends on) parameters	Value type
0	65535	10	1st LVCAN property parameter priority (ID=45100) 1st LVCAN property parameter operand (ID=45101) 1st LVCAN property parameter High level (ID=45102) 1st LVCAN property parameter Low level (ID=45103) 1st LVCAN property parameter Event only (ID=45104)	Uint16

12.13.10 All LVCAN I/O elements parameters property ID

Parameter Name	Priority	Operand	High level	Low level	Event only	Avg const
Vehicle Speed	45100	45101	45102	45103	45104	45105
Acceleration Pedal Position (percent)	45110	45111	45112	45113	45114	45115
Fuel Consumed (liters)	45120	45121	45122	45123	45124	-
Fuel Level (liters)	45130	45131	45132	45133	45134	45135
Engine RPM	45140	45141	45142	45143	45144	45145
Total Mileage	45150	45151	45152	45153	45154	-
Fuel Level (percent)	45160	45161	45162	45163	45164	45165
Door Status	45170	45171	45172	45173	45174	-
Program Number	45180	45181	45182	45183	45184	-
Module ID	45190	45191	45192	45193	45194	-
Engine Worktime	45200	45201	45202	45203	45204	-
Engine Worktime (counted)	45210	45211	45212	45213	45214	-
Total Mileage (counted)	45220	45221	45222	45223	45224	-
Fuel Consumed (counted)	45230	45231	45232	45233	45234	-
Fuel Rate	45240	45241	45242	45243	45244	45245
AdBlue Level (percent)	45250	45251	45252	45253	45254	45255
AdBlue Level (liters)	45260	45261	45262	45263	45264	45265
Engine Load (percent)	45270	45271	45272	45273	45274	45275
Engine Temperature	45280	45281	45282	45283	45284	45285
Axle 1 Load	45290	45291	45292	45293	45294	45295
Axle 2 Load	45300	45301	45302	45303	45304	45305
Axle 3 Load	45310	45311	45312	45313	45314	45315
Axle 4 Load	45320	45321	45322	45323	45324	45325
Axle 5 Load	45330	45331	45332	45333	45334	45335
Control State Flags	45340	45341	45342	45343	45344	-
Agricultural Machinery Flags	45350	45351	45352	45353	45354	-
Harvesting Time	45360	45361	45362	45363	45364	-
Area of Harvest	45370	45371	45372	45373	45374	-
Mowing Efficiency	45380	45381	45382	45383	45384	45385
Grain Mown Volume	45390	45391	45392	45393	45394	-
Grain Moisture	45400	45401	45402	45403	45404	45405
Harvesting Drum RPM	45410	45411	45412	45413	45414	45415
Gap Under Harvesting Drum	45420	45421	45422	45423	45424	45425
Security State Flags	45430	45431	45432	45433	45434	-
Tachograph Total	45440	45441	45442	45443	45444	-

Parameter Name	Priority	Operand	High level	Low level	Event only	Avg const
Vehicle Distance						
Trip Distance	45450	45451	45452	45453	45454	-
Tachograph Vehicle Speed	45460	45461	45462	45463	45464	45465
Tachograph Driver Card Presence	45470	45471	45472	45473	45474	-
Driver 1 States	45480	45481	45482	45483	45484	-
Driver 2 States	45490	45491	45492	45493	45494	-
Driver 1 Continuous Driving Time	45500	45501	45502	45503	45504	-
Driver 2 Continuous Driving Time	45510	45511	45512	45513	45514	-
Driver 1 Cumulative Break Time	45520	45521	45522	45523	45524	-
Driver 2 Cumulative Break Time	45530	45531	45532	45533	45534	-
Driver 1 Selected Activity Duration	45540	45541	45542	45543	45544	-
Driver 2 Selected Activity Duration	45550	45551	45552	45553	45554	-
Driver 1 Cumulative Driving Time	45560	45561	45562	45563	45564	-
Driver 2 Cumulative Driving Time	45570	45571	45572	45573	45574	-
Driver 1 ID High	45580	45581	45582	45583	45584	-
Driver 1 ID Low	45590	45591	45592	45593	45594	-
Driver 2 ID High	45600	45601	45602	45603	45604	-
Driver 2 ID Low	45610	45611	45612	45613	45614	-
Battery Temperature	45620	45621	45622	45623	45624	45625
Battery Level	45630	45631	45632	45633	45634	45635
DTC Faults	45640	45641	45642	45643	45644	-
CNG Status	45890	45891	45892	45893	45894	-
CNG Used	45900	45901	45902	45903	45904	-
CNG Level	45910	45911	45912	45913	45914	-
DTC Codes	45930	45931	45932	45933	45934	-

All LV-CAN200/ALL-CAN300 I/O parameters configuration settings are described in “FMB640 Protocols” document.

12.14 RS232\RS485

12.14.1 RS232

12.14.1.1 RS232 working mode on COM1 (ID=151) and COM2 (ID=173)

RS232 support several modes: 0 – Silent, 1 – Log Mode, 2 – NMEA, 3 – LLS, 4 – LCD, 5 – RFID HID, 6 – RFID MF7, 7 – Garmin FMI, 8 – TCP ASCII, 9 - TCP Binary, 10 - TCP ASCII Buffered, 11 - TCP Binary Buffered, 12 - REC to LCD, 13 - ATOL tachograph, 14 - UL202-2 Fuel Sensor.

Minimum value	Maximum value	Default value	Goes with (depends on) parameters	Value type
0	14	0	RS232 COM 1 Baudrate (ID=152) RS232 COM 2 Baudrate (ID=174)	Uint8

12.14.1.2 RS232 Baudrate on COM1 (ID=152) and COM2 (ID=174)

Every RS232 mode support different Baudrate: 0 – default, 1 – 1200, 2 – 2400, 3 – 9600, 4 – 14400, 5 – 19200, 6 – 38400, 7 – 57600, 8 – 115200.

Minimum value	Maximum value	Default value	Goes with (depends on) parameters	Value type
0	8	Depend on selected Mode	RS232 working mode COM1 (ID=151) RS232 working mode COM2 (ID=174)	Uint8

12.14.2 Garmin Mode Settings (ID=157)

Garmin FMI mode has additional filtering capabilities. It is possible to filter Ping and Unicode packets. If Ping filter will be enabled, then Ping packets will be blocked. If Unicode filter will be enabled, then Unicode packets will not be sent to server. Both filters may be enabled for simultaneous work. Possible values: 0 – No filter, 1 – Ping filter, 2 – Unicode filter, 3 – Ping and Unicode filters.

Minimum value	Maximum value	Default value	Goes with (depends on) parameters	Value type
0	3	0	RS232 working mode COM1 (ID=151) RS232 working mode COM2 (ID=174) RS232 COM 1 Baudrate (ID=152) RS232 COM 2 Baudrate (ID=174)	Uint8

12.14.3 RS485

12.14.3.1 RS485 working mode (ID=160)

RS485 support several modes: 0 – Disabled, 1 – Silent, 2 – Log Mode, 3 – NMEA, 4 – LLS, 5 - TCP ASCII, 6 - TCP Binary, 7 - TCP ASCII Buffered, 8 - TCP Binary Buffered

Minimum value	Maximum value	Default value	Goes with (depends on) parameters	Value type
0	8	0	RS485 Baudrate (ID=161) LLS 1 Address (ID=162) LLS 2 Address (ID=163) LLS 3 Address (ID=164) LLS 4 Address (ID=165) LLS 5 Address (ID=166)	Uint8

12.14.3.2 RS485 Baudrate (ID=161)

Every RS232 mode support different Baudrate: 0 – default, 1 – 1200, 2 – 2400, 3 – 9600, 4 – 14400, 5 – 19200, 6 – 38400, 7 – 57600, 8 – 115200.

Minimum value	Maximum value	Default value	Goes with (depends on) parameters	Value type
0	8	Depends on selected mode	RS485 working mode (ID=160) LLS 1 Address (ID=162) LLS 2 Address (ID=163) LLS 3 Address (ID=164) LLS 4 Address (ID=165) LLS 5 Address (ID=166)	Uint8

12.14.4 RS485 LLS Sensors

LLS addresses may be configured for 5 LLS sensors.

12.14.4.1 LLS 1 Address (ID=162)

LLS fuel level sensor 1 address.

Minimum value	Maximum value	Default value	Goes with (depends on) parameters	Value type
0	254	0	RS485 working mode (ID=160) RS485 Baudrate (ID=161) LLS 2 Address (ID=163) LLS 3 Address (ID=164) LLS 4 Address (ID=165) LLS 5 Address (ID=166)	Uint8

12.14.4.2 LLS 2 Address (ID=163)

LLS fuel level sensor 2 address.

Minimum value	Maximum value	Default value	Goes with (depends on) parameters	Value type
0	254	0	RS485 working mode (ID=160) RS485 Baudrate (ID=161) LLS 1 Address (ID=162) LLS 3 Address (ID=164) LLS 4 Address (ID=165) LLS 5 Address (ID=166)	Uint8

12.14.4.3 LLS 3 Address (ID=164)

LLS fuel level sensor 3 address.

Minimum value	Maximum value	Default value	Goes with (depends on) parameters	Value type
0	254	0	RS485 working mode (ID=160) RS485 Baudrate (ID=161) LLS 1 Address (ID=162) LLS 2 Address (ID=163) LLS 4 Address (ID=165)	Uint8

			LLS 5 Address (ID=166)	

12.14.4.4 LLS 4 Address (ID=165)

LLS fuel level sensor 4 address.

Minimum value	Maximum value	Default value	Goes with (depends on) parameters	Value type
0	254	0	RS485 working mode (ID=160) RS485 Baudrate (ID=161) LLS 1 Address (ID=162) LLS 2 Address (ID=163) LLS 3 Address (ID=164) LLS 5 Address (ID=166)	Uint8

12.14.4.5 LLS 5 Address (ID=166)

LLS fuel level sensor 5 address.

Minimum value	Maximum value	Default value	Goes with (depends on) parameters	Value type
0	254	0	RS485 working mode (ID=160) RS485 Baudrate (ID=161) LLS 1 Address (ID=162) LLS 2 Address (ID=163) LLS 3 Address (ID=164) LLS 4 Address (ID=165)	Uint8

12.15 CAN \ Tachograph parameters

CAN \ Tachograph configuration IDs and parameters.

12.15.1 CAN1 Bus Settings

12.15.1.1 CAN1 bus speed (kbps) (ID=205)

Minimum value	Maximum value	Default value	Goes with (depends on) parameters	Value type
0	1000	250		Uint16

12.15.1.2 CAN1 bus mode (ID=206)

Minimum value	Maximum value	Default value	Goes with (depends on) parameters	Value type
0	1	0		Uint8

12.15.2 CAN2 Bus Settings

12.15.2.1 CAN2 bus speed (kbps) (ID=207)

Minimum value	Maximum value	Default value	Goes with (depends on) parameters	Value type
0	1000	250		Uint8

12.15.2.2 CAN2 bus mode (ID=208)

Minimum value	Maximum value	Default value	Goes with (depends on) parameters	Value type
0	1	0		Uint8

12.15.3 Tachograph Settings

12.15.3.1 Tachograph DDD download source (ID=209)

Minimum value	Maximum value	Default value	Goes with (depends on) parameters	Value type
0	1	0		Uint8

12.15.3.2 Tachograph ignition source (ID=204)

Minimum value	Maximum value	Default value	Goes with (depends on) parameters	Value type
0	4	0		Uint8

12.15.4 WEB Tacho Settings

12.15.4.1 WEB Tacho Status (ID=200)

Minimum value	Maximum value	Default value	Goes with (depends on) parameters	Value type
0	1	0		Uint8

12.15.4.2 WEB Tacho Domain (ID=201)

Minimum value	Maximum value	Default value	Goes with (depends on) parameters	Value type
empty	55 symbols	empty		S8[55]

12.15.4.3 WEB Tacho Port (ID=202)

Minimum value	Maximum value	Default value	Goes with (depends on) parameters	Value type
0	65535	0		Uint16

12.15.4.4 WEB Tacho start delay (min.) (ID=203)

Minimum value	Maximum value	Default value	Goes with (depends on) parameters	Value type
0	255	0		Uint8

12.15.5 FMS Settings

12.15.5.1 FMS data source (ID=210)

Minimum value	Maximum value	Default value	Goes with (depends on) parameters	Value type
0	1	0		Uint8

13 FMB640 WITH LV-CAN 200 AND ALL-CAN 300 CAN ADAPTER

13.1 Purpose of Can Adapters LV-CAN200 and ALL-CAN300

LV-CAN200 is used to listening data from light vehicles, while ALL-CAN300 is used to listening data from any type of transport: light vehicles, Trucks, busses, agriculture and other special transport. With those adapters FMB640 device is able to collect and send vehicle data.

Figure 62 LV-CAN

FMB640 shares the same USB port for connecting adapter and configuring device with PC.
LV-CAN200 and ALL-CAN300 Technical characteristics:

PARAMETER	VALUE
Supply voltage	9 to 50V
Power supply current	Average 10mA Max (peak) 100mA
Working temperature	-40..85 ºC
Max working humidity	60 % (non condensate)

13.2 LV-CAN200 and ALL-CAN300 program number selection

LV-CAN200 or ALL-CAN300 must be set to program number which depends on vehicle model. Needed program number is always written on LV-CAN200 or ALL-CAN300 mounting scheme. Please contact Your Teltonika sales manager to get latest supported vehicle list and mounting scheme for your vehicle, please provide CAR manufacturer, model and year information.

13.2.1 LV-CAN200 and ALL-CAN300 program number configuration via SMS command

LV-CAN200 and ALL-CAN300 program number can be set remotely, using SMS command:

lvcansetprog X

X is new program number value.

CAN program number can be obtained via SMS: **lvcangetprog**
Response: “CAN Program Nr: XXX”

Get CAN info by SMS: **lvcangetinfo**
Response: “Prog: 139SWRevison: 6KernVer: 10KernVar: 49MdlID: 8884443332221110”

13.2.2 Selecting LV-CAN200 and ALL-CAN300 program number manually

Steps to set program number:

- Hold SWITCH down till LED stars blinking
- Release the SWITCH
- Then LED starts blinking and counting first digit of program number, (one blink means digit 1, two blink digit 2 etc.)
- To stop counter push SWITCH
- Release the SWITCH, then LED starts blinking and counting second digit of program number
- To stop counter push SWITCH
- Release the SWITCH, then LED starts blinking and counting third digit on program number
- To stop counter push SWITCH

- Release SWITCH, if programming is succeded LED will blink 10 times

Figure 63 Adapter signaling led

13.2.3 Program number logic change

Due to the growing number of supported cars, program numbers have exceeded 999. In order to maintain one number format, we are moving from 3 digits, to 4 digits program numbers.

In new LV-CAN200/ALL-CAN300 firmware (from 2017-09-01) all program numbers that were up to 999 are changed to start from 1000. So that further program numbers would continue the counting with 4 digit numbers.

However, all existing program numbers stays the same, it is just "1" appeared in front of them. Device still understands entered 3 digit program number (via SMS/GPRS), it will automatically add "1" before it. If you enter "247" - device will turn it into the "1247". In Bootloader it is only 4 digit format available, just add "1" in from of the needed program number.

Example:

If use oldest connection schemes where program number displayed as 3 digit program number:

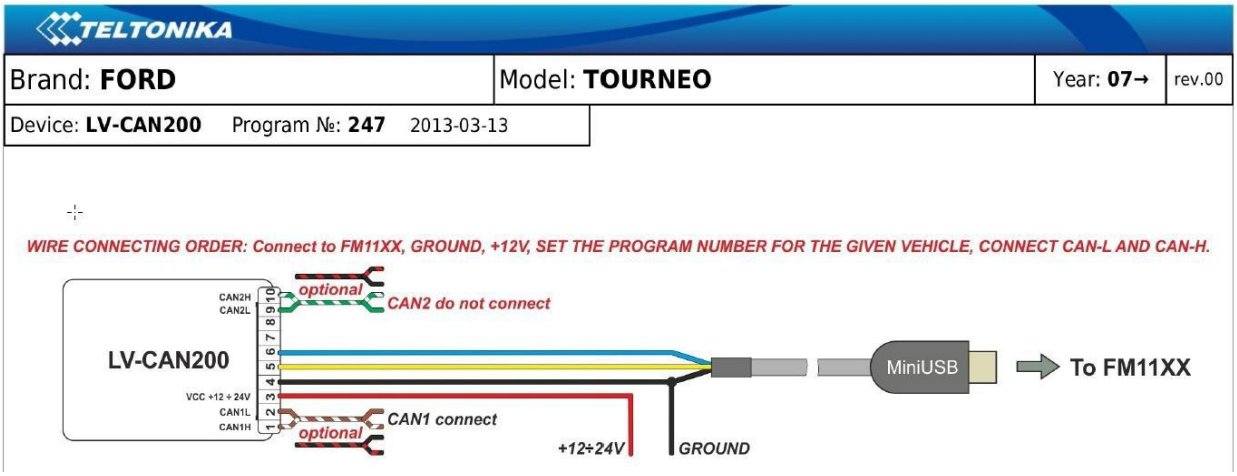

Using LV-CAN200/ALL-CAN300 Bootloader from soft version 2017-09-27 need add "1" before it:

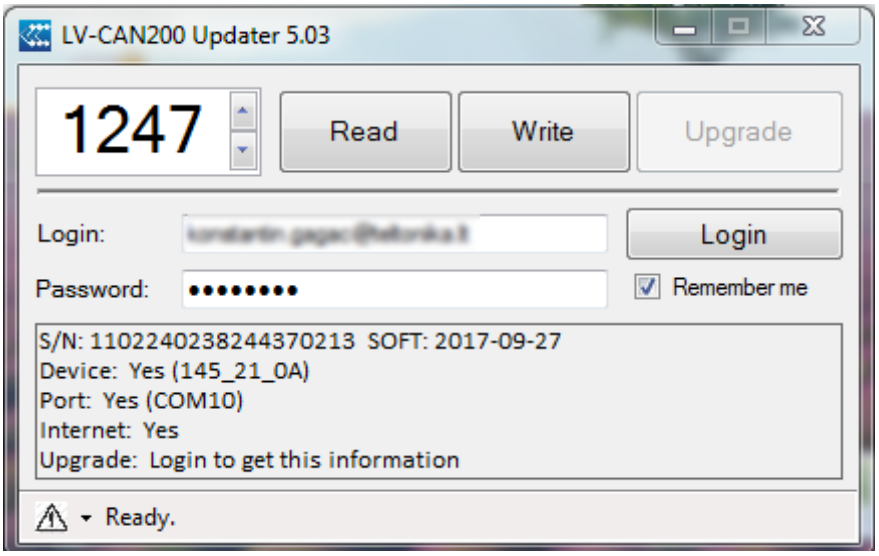

13.3 SIMPLE-CAN - contactless CAN-BUS reader

SIMPLE-CAN is contactless adapter used to read vehicle CAN data with LV-CAN200, ALL-CAN300. If LV-CAN200 or ALL-CAN300 connection requires two CAN lines to get all data, then you need two SIMPLE-CAN readers

TECHNICAL DETAILS

- Power supply voltage 9-63 V
- Power supply current:

Mode	12V	24V
Active	8.3 mA	4.3 mA
Standby	1.6 mA	0.91 mA

- CAN-BUS speeds from 33,33 to 500 kb/s
- Automatically sets CAN Low, CAN High polarity

- Automatically adjusts signal level and speed

SIMPLE-CAN works in the **listening mode only**, so not all the data available on the CAN-BUS may be received using this solution. The device automatically sets CAN L/H polarity, but the calibration has to be always executed during installation process. Connection of previously calibrated unit to another car needs new calibration because the reader automatically adjusts signal level and speed to different CAN-BUSes. The device also automatically adapts to the found noise level**.**

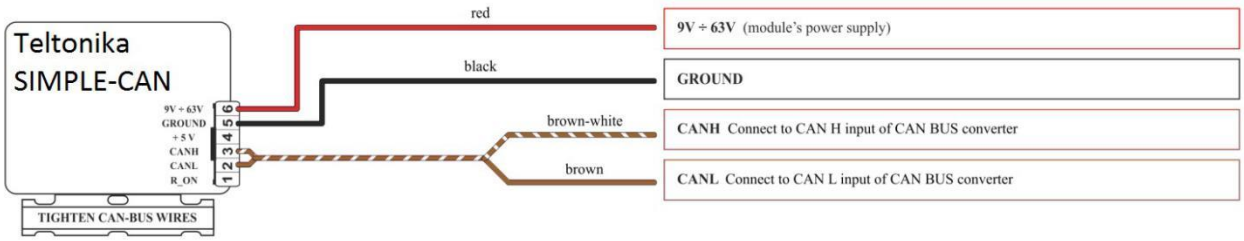

Figure 64 Simple can connection

After power supply connecting, LED shines continuously. It means that device waits for calibration. Calibration process has to be carried out when CAN-BUS twisted pair is tightened on SIMPLE-CAN and when the ignition is ON. Please press the switch shortly and wait for the LED to start blinking every 1 second. Automatic calibration process takes up to 10 seconds depending on the vehicle's model. Correct calibration process is confirmed by LED's every 2 seconds blink (when the CAN-BUS is active). When the CAN-BUS enters sleep mode, SIMPLE-CAN device does it also and takes 1,6mA/12V. In the sleep mode LED does not shine. If after calibration process LED shines continuously, it means that device is not calibrated yet, CAN-BUS transmission has failed or ignition during calibration was not ON.

13.4 Connecting FMB640 Can adapters ALL-CAN300 and LV-CAN200

Connect USB Plug to FMB640 device, connect Light Vehicles Can adapter to other end of the cable.

Connect Light Vehicles Can adapter Pin 1 and Pin 2 to cars CAN bus. CAN interface location of the supported light vehicle is described on mounting scheme.

Connect car power supply lines to Pin 3 positive, Pin 4 Negative.

Pins 9, 10 connections are optional it depends on exact car model.

For exact pinout see sticker on Light Vehicles Can adapter.

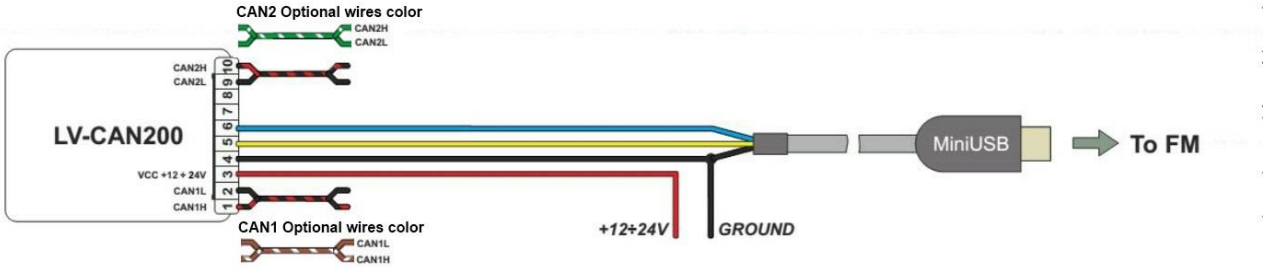

Figure 65 LV-CAN200 Adapter connection cable pinout

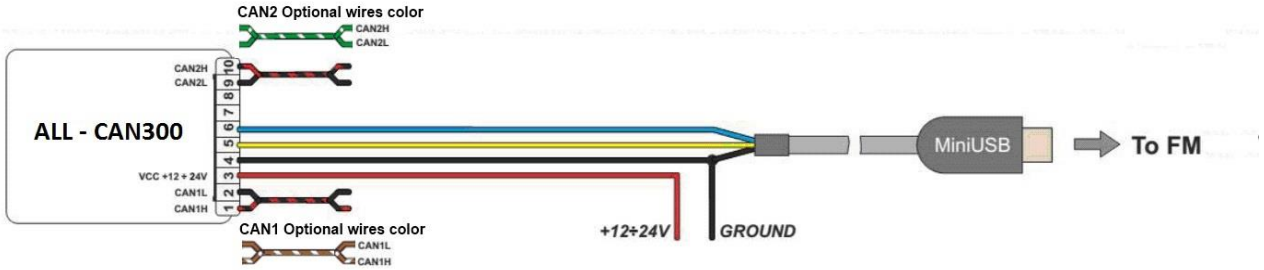

Figure 66 ALL-CAN300 Adapter connection cable pinout

Attention! Ordered LV-CAN200 and ALL-CAN300 packaging may vary:

1. Standard with mini-USB cable.
2. USB PCB (female) + mini-USB cable.

Attention! For detailed connection diagram of adapter to light vehicle please contact Teltonika, LTD sales representative and provide CAR manufacturer, model and year information.

Attention! Do not swap CAN L and CAN H lines.
Do not swap power supply lines. Make sure that voltage do not exceeds 30V. Power supply lines should be connected at the end of installation work.

13.5 FMB640 Configuration with LV-CAN200 and ALL-CAN300

FMB640 shares the same USB port for connecting LV-CAN200 or ALL-CAN300 adapter and configuring device with PC.

FMB640 can be configured using in LVCAN tab.

When FMB640 is connected to CAN adapter (Figure 68), wait 10s (Note, that car engine must be started), disconnect adapter from FMB640, and connect PC USB cable to FMB640 Device, It is very important not to disconnect FMB640 from power source during this operation, because if FMB640 is reconnected all received CAN bus data will be lost. FMB640 remembers

received data from LV-CAN200 or ALL-CAN300 and at the end user will see all CAN data which is sent by adapter. Enable CAN data which needs send to server and save configuration pressing “Save to device” button.

To configure CAN data:

1. In car, connect LV-CAN200 or ALL-CAN300 to CAN bus and to the FMB640 device (Figure 68) wait 10 seconds. Note, that car engine must be started.
2. Disconnect LV-CAN200 or ALL-CAN300 from FMB640 and connect PC USB cable to FMB640 Device, It is very important not to disconnect FMB640 from power source, because then all CAN data will be lost.

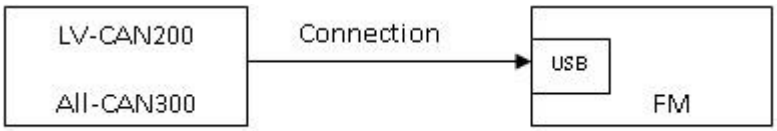

Figure 67 Connect adapter LV-CAN200 to FMB640

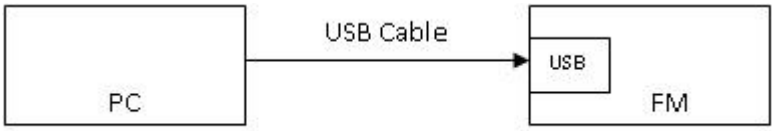

Figure 68 Connect FMB640 to PC and configure

CAN bus data which can be read from your car is shown in “Light or ALL Vehicles Can adapter supported cars” document.

User can select which CAN data will be red from LV-CAN200 or ALL-CAN300 and directly sent to server without connection to adapter. Please note that parameters depend on vehicle manufacturer and vehicle model. Please for further information check “Light and All Vehicles Can adapter supported cars” document.

There are two types of operations with CAN data elements:

- Monitoring of CAN bus data
- CAN bus data event capturing

Monitoring method is used when user wants to receive CAN data on regular basis, for example every 20 seconds.

Event functionality is used to store additional AVL packet when state of CAN element is changing. For example Speed changes, low fuel level, engine temperate, etc.

Send data to server field – allows enabling CAN element so it is added to the AVL data packet and sent to the server. By default, all CAN elements are disabled and FMB640 records only GPS data.

It is possible to set CAN message priority: On Low Priority, On High Priority, and On Panic. Regular packets are sent as Low priority records. When low priority event is triggered, FMB640 makes additional record with indication what was the reason for that was CAN element change. When High priority is selected, module makes additional record with high priority flag and sends event packet immediately to the server by GPRS. Panic priority triggers same actions as high priority, but if GPRS fails, it sends AVL packet to server using SMS mode if SMS is enabled in SMS settings.

Data Acquisition Type – defines when to generate event – when value enters defined range, exits it or both, also is possible to select event which you want to generate then you change values, like crossing both values in high and low levels (Hysteresis).

High and Low levels – defines CAN value range. If CAN value enter or exits this range, FMB640 generates event by "Data Acquisition Type" settings. Figure 70 show example of FMB640 CAN configuration.

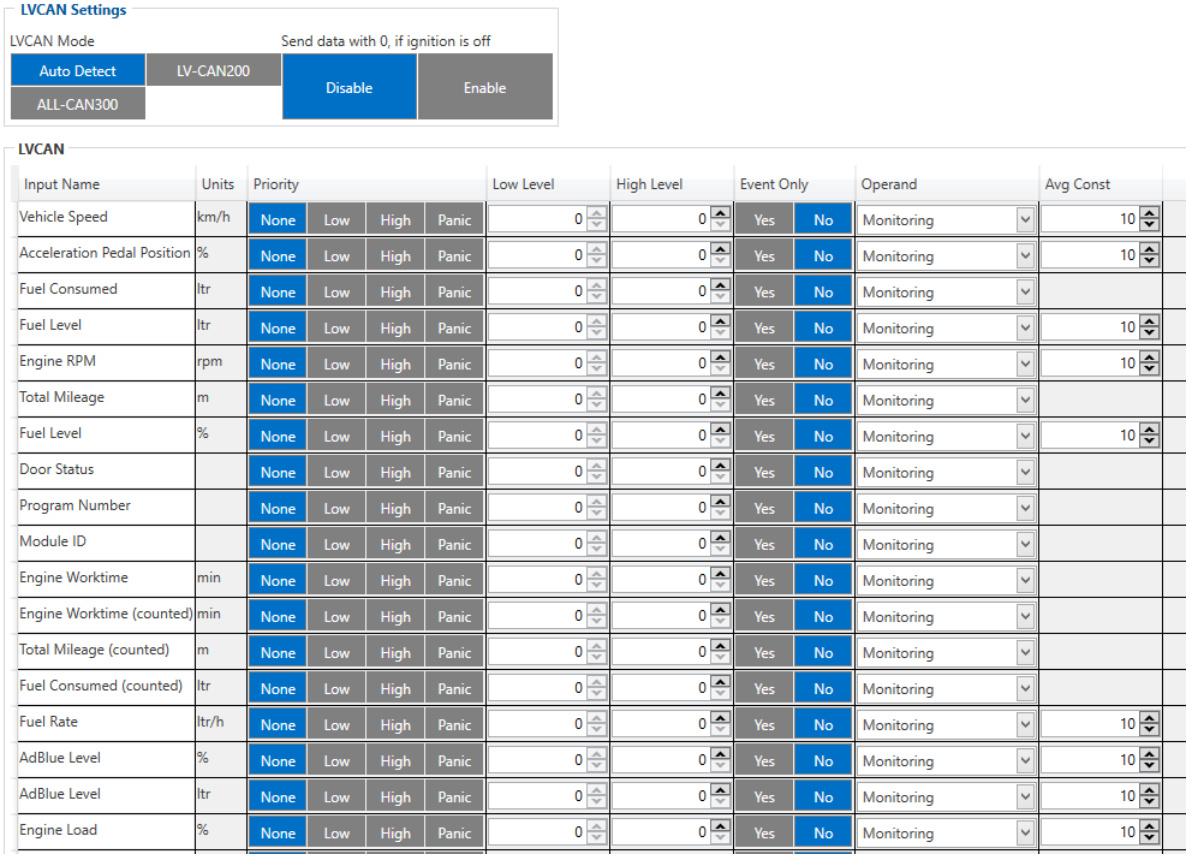

Figure 69 Configurator example

LVCAN mode (ID=903)

This parameter sets LVCAN/ALLCAN detection, available values: 0 – Auto Detect, 1 – LVCAN200, 2 – ALLCAN300.

Minimum value	Maximum value	Recommended value	Goes with (depends on) parameters	Value type
0	2	0		U8

Send data with 0, if ignition is off. Depending on LVCAN/ALLCAN I/O parameters and ignition status, FMB640 can send *locked* (last known) LVCAN/ALLCAN I/O parameters values, *reset* values (set to 0) and *active* (real time) parameters values.

When ignition is off, LVCAN/ALLCAN I/O parameters values sent to server are:

Speed	reset
Accelerator pedal position	reset
Total fuel used	lock
Fuel level (liters)	lock
Engine RPM	reset
Total mileage	lock
Fuel level (proc.)	lock
Program number	lock
Module ID	lock
Engine Work Time	lock
Engine Work Time (counted)	lock
Total Mileage (counted)	lock
Fuel Consumed (counted)	lock
Fuel Rate	reset
AdBlue Level (percent)	lock
AdBlue Level (liters)	lock
Engine Load	reset
Engine Temperature	active
Axle 1 Load	lock
Axle 2 Load	lock
Axle 3 Load	lock
Axle 4 Load	lock
Axle 5 Load	lock
Control State Flags	active
Agricultural Machinery Flags	active
Harvesting Time	lock
Area of Harvest	reset
Mowing Efficiency	active
Grain Mown Volume	active
Grain Moisture	active
Harvesting Drum RPM	reset
Gap Under Harvesting Drum	active
Security State Flags	active
Tachograph Total Vehicle Distance	lock
Trip Distance	reset
Tachograph Vehicle Speed	reset
Tachograph Driver Card Presence	active
Driver1 States	active
Driver2 States	active
Driver1 Continuous Driving Time	active
Driver2 Continuous Driving Time	active
Driver1 Cumulative Break Time	active
Driver2 Cumulative Break Time	active

Driver1 Selected Activity Duration	active
Driver2 Selected Activity Duration	active
Driver1 Cumulative Driving Time	active
Driver2 Cumulative Driving Time	active

Send data with 0, if ignition is off (ID=904)

This parameter enables/disables data sending with 0 value, if ignition is off. 0 – disable, 1- enable.

Minimum value	Maximum value	Recommended value	Goes with (depends on) parameters	Value type
0	1	1		U8

13.6 Parameters ID

When no I/O element is enabled, AVL packet comes with GPS information only. After enabling I/O element(s) AVL packet comes with GPS information and also contains current value(s) of enabled I/O element. AVL packet decoding is described in "FMXXXX Protocols" document. List of available CAN bus data, parameter size and ID you can find in **Error! Reference source not found.**

Table 36 ACQUIRED LV- CAN200 PARAMETRS IO ID

Property ID in AVL packet	Property Name	Bytes	Description
30	LVCAN Speed	1	Value in km/h
31	LVCAN Acc Pedal	1	Value in persentages, %
33	LVCAN Fuel Consumed	4	Value in liters, L
34	LVCAN Fuel Level (liters)	2	Value in liters, L
35	LVCAN Engine RPM	2	Value in rounds per minute, rpm
36	LVCAN Total Mileage	4	Value in meters, m
37	LVCAN Fule Level (percent)	1	Value in percentages, %
12	LVCAN Program Number	4	LVCAN Program Number

NOTE: "Total Fuel Used" is sent to server multiplied by 10.
Example: if value was 150.5 liters, „1505" will be sent to server.

Table 37 ACQUIRED ALL-CAN300 PARAMETRS IO ID

Property ID in AVL packet	Property Name	Bytes	Description
14	LVCAN Engine Work Time	4	Engine work time in minutes
15	LVCAN Engine Work Time (counted)	4	Total Engine work time in minutes

Property ID in AVL packet	Property Name	Bytes	Description
16	LVCAN Total Mileage (counted)	4	Total Vehicle Mileage, m
17	LVCAN Fuel Consumed (counted)	4	Total Fuel Consumed,liters * 10
18	LVCAN Fuel Rate	2	Fuel Rate, liters *10
19	LVCAN AdBlue Level (percent)	1	AdBlue, %
20	LVCAN AdBlue Level (liters)	2	AdBlue level, L
23	LVCAN Engine Load	1	Engine load, %
25	LVCAN Engine Temperature	2	Engine Temperature, 10 * Degrees (°C),
26	LVCAN Axle 1 Load	2	Axle 1 load, kg
27	LVCAN Axle 2 Load	2	Axle 2 load, kg
28	LVCAN Axle 3 Load	2	Axle 3 load, kg
29	LVCAN Axle 4 Load	2	Axle 4 load, kg
32	LVCAN Axle 5 Load	2	Axle 5 load, kg
38	LVCAN Control State Flags	4	Control state flags
39	LVCAN Agricultural Machinery Flags	8	Agricultural machinery flags
40	LVCAN Harvesting Time	4	Harvesting Time, minutes
41	LVCAN Area of Harvest	4	Area of Harvest, m^2
42	LVCAN Mowing Efficiency	4	Mowing efficiency, (m^2)/h
43	LVCAN Grain Mown Volume	4	Mown Volume, kg
44	LVCAN Grain Moisture	2	Grain Moisture in proc, %
45	LVCAN Harvesting Drum RPM	2	Harvesting Drum RPM, RPM
46	LVCAN Gap Under Harvesting Drum	1	Gap Under Harvesting Drum, mm
47	LVCAN Security State Flags	8	Security State Flag
48	LVCAN Tacho Total Vehicle Distance	4	Tacho Total Vehicle Distance, m
49	LVCAN Trip Distance	4	Trip Distance, m
52	LVCAN Tacho Vehicle Speed	2	Tacho Vehicle Speed, km/h
53	LVCAN Tacho Driver Card Presence	1	Tacho Driver Card Presence
54	LVCAN Driver1 States	1	Driver1 States
55	LVCAN Driver2 States	1	Driver2 States
56	LVCAN Driver1 Continuous Driving Time	2	Driver1 Continuous Driving Time, minutes

Property ID in AVL packet	Property Name	Bytes	Description
57	LVCAN Driver2 Continuous Driving Time	2	Driver2 Continuous Driving Time, minutes
58	LVCAN Driver1 Cumulative Break Time	2	Driver1 Cumulative Break Time, minutes
59	LVCAN Driver2 Cumulative Break Time	2	Driver2 Cumulative Break Time, minutes
60	LVCAN Driver1 Duration Of Selected Activity	2	Driver1 Duration Of Selected Activity, minutes
61	LVCAN Driver2 Duration Of Selected Activity	2	Driver2 Duration Of Selected Activity, minutes
69	LVCAN Driver1 Cumulative Driving Time	2	Driver1 Cumulative Driving Time, minutes
77	LVCAN Driver2 Cumulative Driving Time	2	Driver2 Cumulative Driving Time, minutes
106	LVCAN Driver1 ID High	8	Driver1 ID High
107	LVCAN Driver1 ID Low	8	Driver1 ID Low
108	LVCAN Driver2 ID High	8	Driver2 ID High
140	LVCAN Driver2 ID Low	8	Driver2 ID Low
141	LVCAN Battery Temperature	2	10* Degrees, (°C)
142	LVCAN Battery Level (percent)	1	Value in percentages, %
143	LVCAN Door Status	2	Door status value: Min – 0, Max – 16128 Door status is represented as bitmask converted to decimal value. Possible values: 0 – all doors closed, 0x100 (256) – front left door is opened, 0x200 (512) – front right door is opened, 0x400 (1024) – rear left door is opened, 0x800 (2048) – rear right door is opened, 0x1000 (4096) – hood is opened, 0x2000 (8192) – trunk is opened, 0x3F00 (16128) – all doors are opened, or combinations of values
176	LVCAN DTC Errors	1	DTC errors count
226	LVCAN CNG Status	1	0 – engine not on CNG 1 – engine not on CNG
227	LVCAN CNG Used	4	CNG used Value in kg * 10
228	LVCAN CNG Level	2	CNG level in percentages, % * 10
177	LVCAN DTC Codes		DTC codes

NOTE:

„Total Fuel Used“ is sent to server multiplied by 10.

Example: if value was 150.5 liters, „1505“ will be sent to server.

Table 38 ALLCAN300 IO element values

Idx	Description	Size,	AVL	Value bitmasks

		Bytes	ID	
1	Control state flags	4	38	**Byte0 (LSB):** **0x01** – STOP **0x02** – Oil pressure / level **0x04** – Coolant liquid temperature / level **0x08** – Handbrake system **0x10** – Battery charging **0x20** – AIRBAG **Byte1:** **0x01** – CHECK ENGINE **0x02** – Lights failure **0x04** – Low tire pressure **0x08** – Wear of brake pads **0x10** – Warning **0x20** – ABS **0x40** – Low Fuel **Byte2:** **0x01** – ESP **0x02** – Glow plug indicator **0x04** – FAP **0x08** – Electronics pressure control **0x10** – Parking lights **0x20** – Dipped headlights **0x40** – Full beam headlights **Byte3:** **0x40** – Passenger's seat belt **0x80** – Driver's seat belt
2	Agricultural machinery flags	8	39	**Byte0 (LSB):** **0x01** – Mowing **0x02** – Grain release from hopper **0x04** – First front hydraulic turned on **0x08** – Rear Power Take-Off turned on **Byte1:** **0x01** – Excessive play under the threshing drum **0x02** – Grain tank is open **0x04** – 100% of Grain tank **0x08** – 70% of Grain tank **0x10** – Drain filter in hydraulic system of drive cylinders is plugged **0x20** – Pressure filter of drive cylinders hydraulic system is plugged **0x40** – Alarm oil level in oil tank **0x80** – Pressure filter of brakes hydraulic system is plugged **Byte2:** **0x01** – Oil filter of engine is plugged **0x02** – Fuel filter is plugged **0x04** – Air filter is plugged **0x08** – Alarm oil temperature in hydraulic

				system of chasis **0x10** – Alarm oil temperature in hydraulic system of drive cylinders **0x20** – Alarm oil pressure in engine **0x40** – Alarm coolant level **0x80** – Overflow chamber of hydraulic unit **Byte3:** **0x01** – Unloader drive is ON. Unloading tube pivot is in idle position **0x02** – No operator! **0x04** – Straw walker is plugged **0x08** – Water in fuel **0x10** – Cleaning fan RPM **0x20** – Trashing drum RPM **Byte4:** **0x02** – Low water level in the tank **0x04** – First rear hydraulic turned on **0x08** – Standalone engine working **0x10** – Right joystick moved right **0x20** – Right joystick moved left **0x40** – Right joystick moved front **0x80** – Right joystick moved back **Byte5:** **0x01** – Brushes turned on **0x02** – Water supply turned on **0x04** – Vacuum cleaner **0x08** – Unloading from the hopper **0x10** – High Pressure washer (Karcher) **0x20** – Salt (sand) disperser ON **0x40** – Low salt (sand) level **Byte6:** **0x01** – Second front hydraulic turned on **0x02** – Third front hydraulic turned on **0x04** – Fourth front hydraulic turned on **0x08** – Second rear hydraulic turned on **0x10** – Third rear hydraulic turned on **0x20** – Fourth rear hydraulic turned on **0x40** – Front three-point Hitch turned on **0x80** – Rear three-point Hitch turned on **Byte7:** **0x01** – Left joystick moved right **0x02** – Left joystick moved left **0x04** – Left joystick moved front **0x08** – Left joystick moved back **0x10** – Front Power Take-Off turned on
3	Security state flags	8	47	**Byte0 (LSB):** **0x20** – bit appears when any operate button in car was put **0x40** – bit appears when immobilizer is in service mode **0x80** – immobiliser, bit appears during introduction of a programmed sequence of

				keys in the car. **Byte1:** **0x01** – the key is in ignition lock **0x02** – ignition on **0x04** – dynamic ignition on **0x08** – webasto **0x20** – car closed by factory's remote control **0x40** – factory-installed alarm system is actuated (is in panic mode) **0x80** – factory-installed alarm system is emulated by module **Byte2:** **0x01** – parking activated (automatic gearbox) **0x10** – handbrake is actuated (information available only with ignition on) **0x20** – footbrake is actuated (information available only with ignition on) **0x40** – engine is working (information available only when the ignition on) **0x80** – revers is on **Byte3:** **0x01** – Front left door opened **0x02** – Front right door opened **0x04** – Rear left door opened **0x08** – Rear right door opened **0x10** – engine cover opened **0x20** – trunk door opened **Byte4:** **0x01** – car was closed by the factory's remote control **0x02** – car was opened by the factory's remote control **0x03** – trunk cover was opened by the factory's remote control **0x04** – module has sent a rearming signal **0x05** – car was closed three times by the factory's remote control - High nibble (mask 0xF0 bit) **0x80** – CAN module goes to sleep mode
4	Tachograph driver card presence	1	53	**0x00** – No driver card **0x01** – Driver1 card presence **0x02** – Driver2 card presence **0x03** – Driver1 and driver2 cards present
5	Driver 1 states	1	54	**0xX0** – break/rest **0xX1** – availability **0xX2** – work **0xX3** – driving **0x0X** – no time-related warning detected **0x1X** – limit #1: 15 min before 4 1/2 h **0x2X** – limit #2: 4 1/2 h reached (continuous driving time exceeded) **0x3X** – limit #3: 15 minutes before optional warning 1 **0x4X** – limit #4: optional warning 1 reached
6	Driver 2 states	1	55	

				0x5X – limit #5: 15 min before optional warning **0x6X** – limit #6: optional warning 2 reached
7	LVCAN Door Status	2	143	Door status value: Min – **0**, Max – **16128** Door status is represented as bitmask converted to decimal value. Possible values: 0 – all doors closed, **0x100** (256) – front left door is opened, **0x200** (512) – front right door is opened, **0x400** (1024) – rear left door is opened, **0x800** (2048) – rear right door is opened, **0x1000** (4096) – hood is opened, **0x2000** (8192) – trunk is opened, **0x3F00** (16128) – all doors are opened, or combinations of values

14 CAN

Controller Area Network (CAN or CAN-bus) is a computer network protocol and bus standard designed to allow microcontrollers and devices to communicate with each other and without a host computer. It was designed specifically for automotive applications but is now also used in other areas.

SAE J1939 and J1708* is the vehicle bus standard used for communication and diagnostics among vehicle components. Based on the same architecture FMS protocol dedicated to telematics systems is available. It has certain standardized parameters available, such as fuel consumption, engine work-hours, etc. Please visit http://www.fms-standard.com/ for more information and message structure.

The FMS-interface is an optional interface of different truck manufacturers. Supported information is dependent upon vehicle equipment. For the full information set, additional Electronic Control Units (ECU) may be required. Please contact the manufacturer or your dealer for more details.

Vehicle brands supported:

- Mercedes Benz
- Volvo
- MAN
- DAF
- Iveco
- Scania
- Renault

* Availability of parameter depends on vehicle's model and configuration of FMS interface of the truck.

**J1708 is additional FMS protocol used by some vehicle manufacturers. If your vehicle supports J1939 and J1708 both protocols then you must disable J1708 in configuration to receive fuel data.*

14.1 General description

- CAN works if no USB cable is inserted and isn't in deep sleep mode;
- Uses six different speeds: 50 kbps, 100 kbps, 125 kbps, 250 kbps, 500 kbps, 1000kbps;
- Auto Baud rate detection;
- Filtering messages (StId, ExtId) according to configuration;
- Using mask, filters required bytes;
- Different CAN configurations.

14.2 FMB640 J1708 Connection

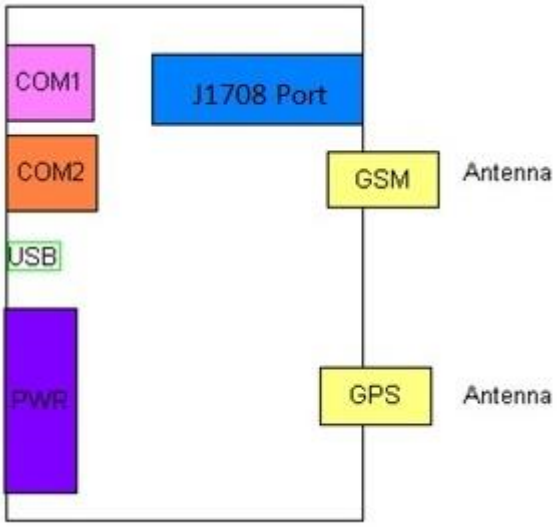

Figure 70 FMB640 diagram

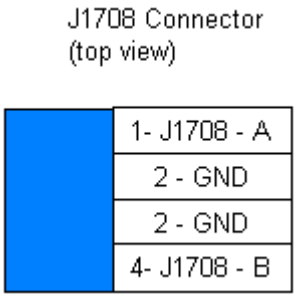

Figure 71 J1708 Connector diagram

Connection with Vehicle port

Check Vehicle diagsnostic port pinout diagram and connect like is shown below.

FMB640	Vehicle
J1708-A	J1708A J1708+
J1708-B	J1708B and J1708-

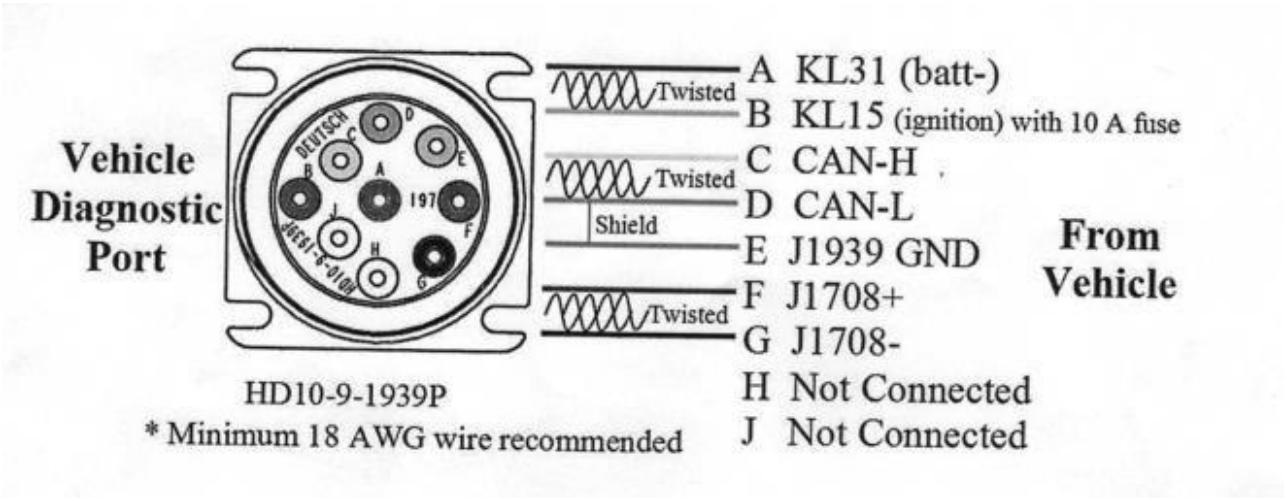

Figure 72 Example of Diagnostic port

14.3 Software Configuration of FMB640 with J1708

Firmware version: 00.00.11 or above
Configurator version: 0.13.35.29297 or above

Enable J1708 Line in System Tab.

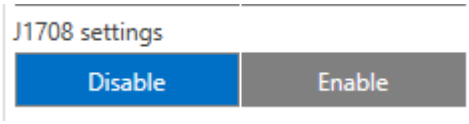

Figure 73 J1708 Line configuration

Enable Fuel Level in FMS IO

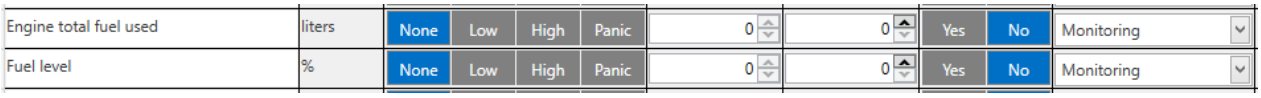

Figure 74 FMS fuel

For AVL ID please consult FMS document.

14.4 FMS Configuration over SMS

14.4.1 SMS command format:

"<login><space><password><space>setparam<space><ParameterID>:<New value>"

if there is no login and password configured in FM configuration, 2 spaces must be used before command :

<space><space><command>.

Here we set FMB640 *to make a high priority event once the* FMB640 *either reaches higher than 70km/h speed or starts going lower than 50km/h.*

**If we want to configure FMB640 to make a panic event everytime brake pedal is either pushed or released, the following SMS's should be sent:

<space><space>setparam 70500:3 (here we set priority as Panic (Panic value=3)
<space><space>setparam 70501:5 (here we set operand as On Change. This parameter has only 2 value)

14.4.2 FMS element Id's

Table 39 FMS element Id's

Category name	Element ID	Element name
Cruise Control/Vehicle Speed	70500	Brake switch
	70510	wheel based speed
	70520	cruise control active
	70530	clutch switch
	70540	PTO state
Electronic Engine Controller #2	70550	Accelerator pedal position 1 X
	70560	Engine Percent Load At Current Speed X
Fuel Consumption	70570	Engine total fuel used
Dash Display	70580	fuel level 1 X
Electronic Engine Controller #1	70590	Engine speed X
Vehicle Weight **	70600-70740 (every 10)	Axle location
		Tire location
		Axle weight
Engine Hours, Revolutions: HOURS	70750	Engine total hours of Operation X
Vehicle Identification	70760	vehicle identification number X
FMS Standard interface	70770	SW-version supported X
	70780	Diagnostics supported X
	70790	Requests supported X
High Resolution Vehicle Distance	70800	High resolution total vehicle distance X
Service Information	70810	Service distance
Tachograph	70820	Vehicle motion X
	70830	driver 2 working state X
	70840	driver 1 working state X
	70850	Vehicle overspeed
	70860	Driver 1 time rel. states
	70870	Driver 2 time rel. states
	70880	Driver 1 card X
	70890	Driver 2 card X
	70900	Direction indicator
	70910	Tachograph performance X
	70920	Handling information X
	70930	System event X
	70940	Tachograph vehicle speed X
Engine Temperature 1	70950	engine coolant temperature X
Ambient Conditions	70960	Ambient Air Temperature X
Driver's Identification	70970	Driver 1 ID
Driver's Identification	70980	Driver 2 ID
Fuel Economy	70990	Fuel rate
	71000	Instantaneous Fuel Economy

Category name	Element ID	Element name
PTO Drive Engagement	71010	At least one PTO engaged
High Resolution Fuel Consumption (Liquid)	71020	High resolution engine total fuel used
Combined vehicle weight	71030	Combined vehicle weight

15 USING TACHOGRAPH

FMB640 device can read tachograph data. User can connect FM to vehicle unit tachograph device. Supported devices are: Siemens VDO Digital Tachograph – DTCO 1381 (release 1.3a, 1.4 or later) and Stoneridge Tachograph – SE5000 (release 7.1 or later)

15.1 Connecting to tachograph

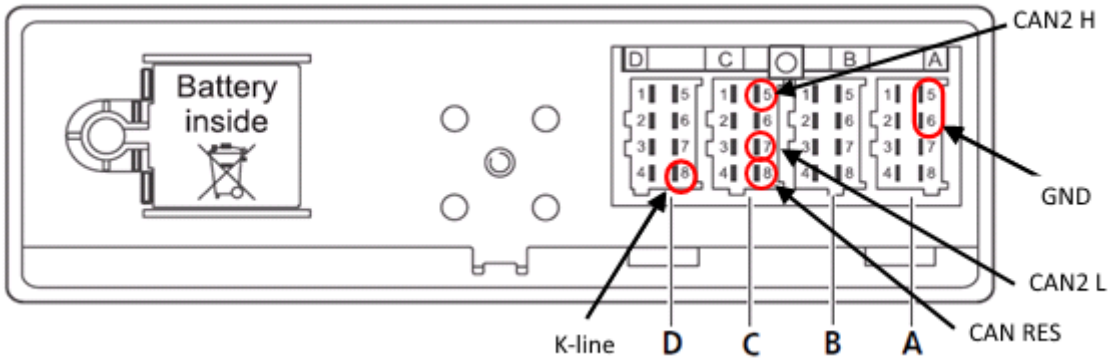

Figure 75 Tachograph connection

Connection to tachograph (Figure 757):

- Before connecting tachograph wires, it is required to measure CAN line resistance while tachograph is switched off:
  - Turn off the vehicle ignition;
  - Measure resistance between the C5 (CAN2 H) and C7 (CAN2 L) contacts;
  - If the multimeter shows ~120 Ohms, skip the next step;
  - If the multimeter shows kiloOhms resistance then it is needed to connect tachograph C8 (CAN-RES) and C7 (CAN2 L) contacts with wire and then perform further actions;
  - Re-measure the resistance of the line – it has to be ~120 Ohms.
  - Connect CAN2 L and CAN2 H wires to tachograph (C5 (CAN2 H) and C7 (CAN2 L))
- All of the same level CAN-L and CAN-H wires must be interlaced with each other.

- CAN wires need to be installed as far as possible from GSM antenna.

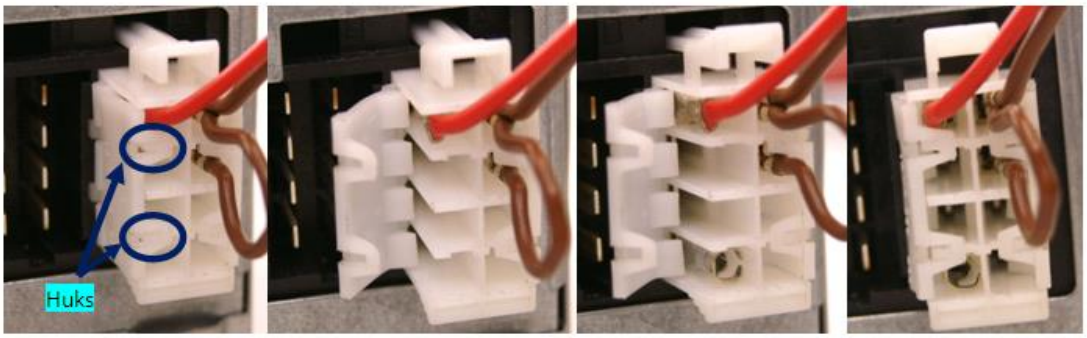

Figure 76 Adding contact on tachograph connector

- Tachograph D8 and adapter K-Line connectors connected directly.
- Tachograph mounted on vehicles does not have D8 contact. In order to add it, you have to undo the hooks and add the contacts (Figure 76). Contact code in Farnell system: 927368-1.
- Direct GND connection is required only if vehicle and tachograph grounds are not merged. (It can be checked using multimeter. Connection between different grounds should be 0 volts)

NOTE! Connecting to Stoneridge tachograph, for K-Line data, this configuration must take place:

1. Insert Company card in tachograph.
2. Configure tachograph in this way:
   Menu->Settings->Parameters->D8 data format->SRE

Each described Vehicle Data element is packed to standard AVL packet and sent to server. Parameter values are sent depending on configuration element ID that is described in „K LINE ID“column (IO parameter ID).

Vehicle data configuration window (Figure 77) can be opened by selecting “K Line” in the Configurator. There is the list which holds all elements; each one can be selected by ticking to its name.

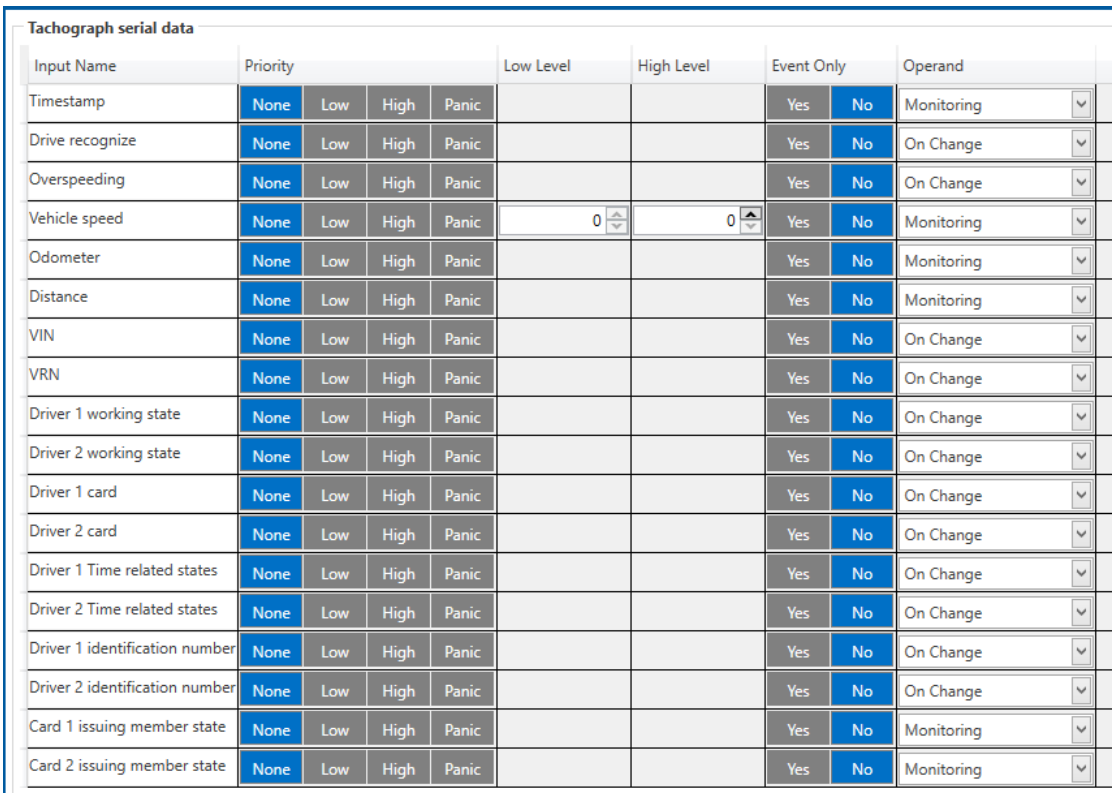

Figure 77 Vehicle data configuration window

Driver 1 ID and Driver 2 ID Tachograph data elements are packed to standard AVL packet and send to server dependent on configuration with element ID described in „K LINE ID“ column. Note that driver ID is 16 bytes long. For this reason it is split to 2 IO elements. On the server side it is required to merge those two IO elements to have full driver ID for whole 16 bytes.

It is also possible to configure Vehicle Data element using SMS or GPRS according to basic FM functionality, parameters following parameters stated before.

15.2 WEB Tacho

WEB Solution for Tachograph files download. Teltonika Tacho WEB Solution is a big forward leap in remote tachograph data files download. Solution is easily manageable and does not require any complex software* installation. Everything is accessible via web page. Now you can download tachograph files from any place and from any PC with internet access.

***- requires company card reader software installation on a single company PC**

Access and download tachograph files of your whole fleet from within a single, web browser-based interface. Compatible with browsers across all platforms, requires no installation or additional plug-ins

Once you create a schedule, selected tachograph files will be downloaded automatically. Data will be downloaded every defined period, for example once a week, once a month etc.

FMB640 device has a possibility to connect to WebDDD IP every 1 hour and check if there are any schedules for downloading DDD files. If FMB640 connects to WebDDD server, and there is a planned schedule but other device is already downloading and company card is in use, device keeps link with WebDDD server but still sends data to main server with AVL data. After successful

download, device closes link with WebDDD and reconnects after 1 hour. Data is stored on secured server and can be accessed only by your authorized users. You don't need to worry that any file is lost and you have to download it from tachograph once again.

We support not only the standard DDD file extension, but also Spanish TGD and French V1B, C1B file formats. You simply set required one in Tacho Web user settings

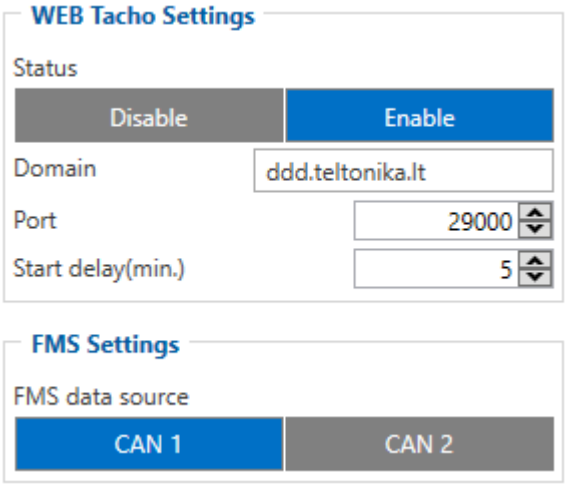

Figure 78 Connection to Web DDD

15.3 TACHOCHECK SMS

"tachocheck" sms message can be sent to device. It is used for getting status information. SMS response is of such structure:

CAN_2:[TRC],[ABCD], K-Line:[K]

[T] – Tachograph presence on bus:

- 0 – Tachograph doesn't respond on bus;
- 1 – Tachograph responds on bus.

[R] – Response to OpenRemoteSession validity check:

- 0 – Wrong or unknown response (failed to open RemoteSession);
- 1 – Tachograph responds positively (RemoteSession opened successfully).

[C] – Response to CloseLastAuthenticationSession validity check:

- 0 – Wrong or unknown response (failed to close last authentication session);
- 1 – Last authentication session closed successfully, device is ready to open new authentication session.

[K] – K-Line data presence on bus:

- 0 – K-Line data not present on bus;
- 1 – K-Line data present on bus.

[ABCD] – FMS data presence on bus:

- 0000 – FMS data not present on bus
- Non-zero – FMS data detected on bus.

FMS data value is shown in hexadecimal system and it is not important for the client.

16 RS485 INTERFACE

RS485 supports only Half Duplex communication. It means that at the same time you can't send/receive Data.

When activated RS485 driver chip draws constant 30mA current.

When entering Sleep or Deep sleep chip will be also powered off.

Port connection diagram are shown on the Figure 790:

FMB640 RJ-45 (Female)

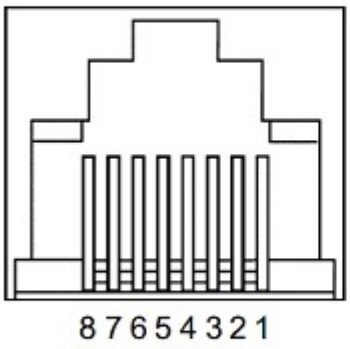

Pin Nr.	Description
1	RS485 B
2	RS485 A
3	
4	GND
5	RS232 Tx
6	RS232 Rx
7	
8	

Figure 79 Port 1 connection diagram

17 RFID

Radio-frequency identification (RFID) is the use of a wireless non-contact system that uses radio-frequency electromagnetic fields to transfer data from a tag attached to an object, for the purposes of automatic identification and tracking. FMB640 can be configured in a way to use with an RFID reader. When an RFID of some sorts (typically a plastic card with a magnetic line) is used with an RFID reader which is connected to FMB640, the device creates a record with the data that the RFID reader has read and can be sent to a server with all other information. RFID ID is activated like an I/O parameter (Figure 801).

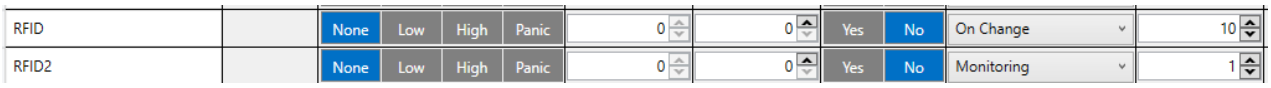

Figure 80 RFID I/O parameter

To set up FMB640 so it can be connected to an RFID reader, some parameters have to be set up. Go to RS232 \ RS485 and set up COM1 or COM2 settings to RFID Mode or RFID MF7

Mode (the used mode depends on the mode that the RFID reader works). See Figure 812. The Baudrates for each mode are:

RFID Mode – 57600

RFID MF7 Mode – 9600

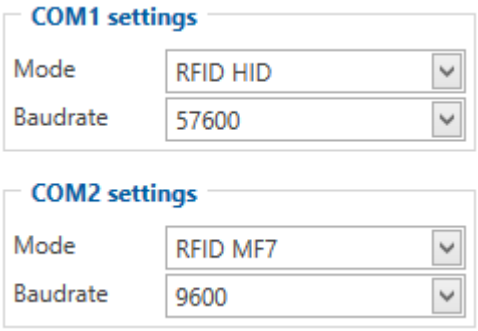

Figure 81 RFID Global parameter settings

The difference between RFID Mode and RFID MF7 Mode is that in RFID Mode FMB640 understands RFID messages that are in hexadecimal format and RFID MF7 Mode understands messages that are in decimal format. For example:

RFID Mode message – *"aa02$03$04$17$89$00$01"*

RFID MF7 Mode message – *"1213141519"*

The chosen mode has to correspond to the RFID reader's mode. What type of RFID is sent to FMB640 depends on the reader.

For more information about RFID ID's and devices, please contact to your local sales representative.

18 GARMIN

Garmin provides a Fleet Management Interface Tool Kit which connected to FMB640 enables the driver to have a "screen" in their vehicle for real-time navigation, messaging, and job dispatch capabilities to help them be more efficient.

FMB640 and Garmin operational scheme is shown in Figure 823 below:

Figure 82 FMB640 +Garmin operational scheme

18.1 Supported Garmin FMI Protocols

The following is a list of protocols supported and the corresponding feature/benefit. FMB640 can fully support Fleet Management Interface (FMI) versions up to 2.1. Other or higher versions may be supported, but Teltonika is not responsible for the changes made by Garmin,

which may affect the work of FMB640 and Garmin products. For more information about Garmin products and FMI versions, please go to Garmin Products. Notice that some Garmin products use different connection cables than others.

18.1.1 Standard protocols

Text Message Protocol:

- Allows text messages sent to device to be displayed in "inbox" on unit.
- Garmin can provide confirmation that message was read.
- Garmin can also provide a yes/no box below the text of the message to enable a simple quick response.
- Messages can be up to 199 characters in length.
- Messages can also be generated from device and sent to dispatch/office.
- Messages received will be notified to driver through a pop-up alert on Garmin screen.
- Garmin provides a "virtual keyboard" on device through a touch-screen format for all text communication.

Stop (Destination) Protocol:

- Garmin can display a list of Stops/Jobs reported to the device in a separate icon called "My Stops".
- Driver has ability to navigate directly to Stop from list.
- Garmin can provide status on current Stop in progress.
- Is driver stopped at location?
- How far has Driver progressed through the list of Stops?
- Garmin can also provide confirmation that driver has received a particular Stop, read the details, or deleted it from list.
- Can provide confirmation that a Stop has been completed.

Estimated Time of Arrival Protocol:

- Dispatcher/office can request the ETA of the current stop/job in progress.
- Garmin will notify the actual time of arrival as well as distance remaining to stop.

Auto-Arrival at Stop Protocol:

- This feature is used to tell the Garmin PND to automatically detect that it has arrived at a Stop and then to prompt the driver if they would like to mark the

Stop as done and begin navigating to next Stop on the list.

- Auto-arrival can be determined by how long the unit is stopped close to the destination (in the event driver has to park and walk) or by how close the unit needs to be to the destination before the Auto-arrival feature is activated.

Data Deletion Protocol:

- Dispatch/office has the ability to wipe clean the data on the Garmin PND.
- Clean up messages in inbox/remove stops.

18.1.2 Enhanced protocols

Canned Responses/Messages:

- Fleet managers can communicate by sending up to 200 "canned" responses from server to be stored directly on Garmin devices.

• Up to 50 of these canned responses can be utilized for any given scenarios.
• Drivers can store up to 120 canned messages, eliminating the need to type while driving.

Status Protocol:

• Up-to-the-minute communications that allow drivers to automatically send status updates.
• Driver's units can store up to sixteen status indicators such as start/stop shift, on/off break, etc.

18.2 Supported features on Tavl client application

Tavl client application lets user to use the following features of GARMIN FMI:

1. Text messaging.
2. Destination message.
3. ETA request.

18.3 Text messaging

Text messaging feature lets user to communicate with driver (user that uses Garmin device) by sending text messages via GPRS.

18.4 Destination message

Destination message is used to inform a driver of a new destination. When Garmin device receives a destination message from server it displays it as “Stop” to the driver and also gives the driver ability to start navigating to the “Stop” location. New destination in Tavl client is represented as Geozone so new Geozone (as destination) has to be created first.

18.5 ETA request message

ETA (Estimated Time of Arrival) request message is used when user wants to know expected arrival time to currently active destination and distance (in meters) from current object location to currently active destination.

18.6 Connection and pinout

FMB640 RJ-45 (Female)

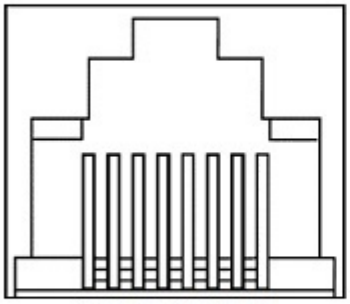

Pin Nr.	Description
1	RS485 B
2	RS485 A
3	
4	GND
5	RS232 Tx
6	RS232 Rx
7	
8	

Figure 83 RJ45 Pinouts

In order to connect Garmin PND to FMB640, Garmin mode has to be set in RS232 \ RS485 settings (Figure 845). Simply choose Garmin mode in COM2 settings mode, but you cannot activate Garmin mode in both ports at the same time.

FMB640 is able to filter out some of Garmin FMI packets that are not used in some applications (including Tavl system) and generates additional data transfer at the same time increasing bills of GSM services. In order to enable Garmin FMI Ping Packet Filtering set this feature from RS232 \ RS485 parameters – enable Garmin Ping setting

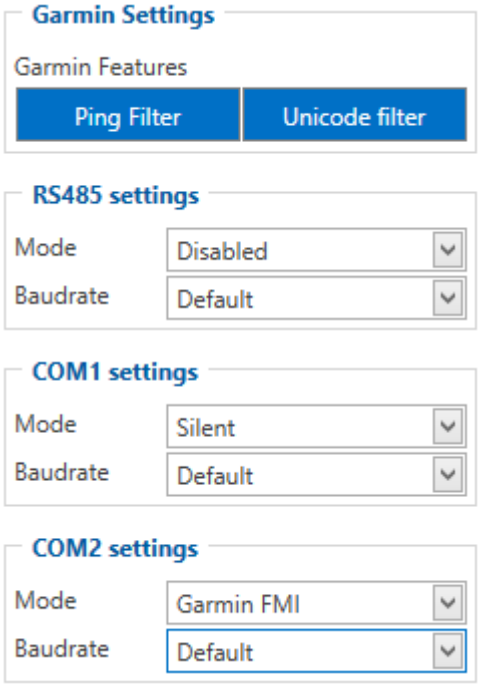

Figure 84 Configuration of Garmin in RS3

NOTE: Garmin FMI protocols are supported only in TCP data transfer mode.

Garmin Fleet management Interface documentation can be downloaded from Official Garmin web page: Garmin/Downloads.
Software version updates: Garmin/Softwares.

For more information about Garmin PND device connectivity to FMB640 and additional information, please contact to your local sales representative.

19 LLS SENSOR

LLS sensor series liquid level sensors are solid-state capacitive devices with no moving parts. The sensors use capacitive technology to produce accurate liquid level measurements of standard factory grade DIESEL OIL and PURE GASOLINE (BENZINE) carbon fuels.

The LLS sensor liquid level sensors are strictly prohibited to use in any liquids which are not the factory grade carbon fuels or contain: BIOFUEL, METHANOL, ETHANOL, UREA and similar aggressive components in pure form or as additives for factory grade carbon fuels for use in INTERNAL COMBUSTION ENGINES. Operating media – Diesel fuel (oil), pure gasoline (benzene).

IMPORTANT!
The power supply is 10-50 VDC stabilized. The wrong polarity (-) or (+) connection of power supply will damage or destroy the device. Prohibited for test or use in water and any other liquids, which are not factory grade carbon fuels. Fit the plastic insulation cap on the end of the central rod after installation accordingly to installation guide. To be installed, calibrated, tested only by qualified authorized person (installer, technician, mechatronic).

19.1 Specifications

Supply voltage, DC V	10...50*
Current consumption, mA (for 12/24 V)	25/50
Operation temperature, Celsius degrees	-40...+85
Working mode	continuous
Weight, kg	< 2.0
Working pressure	atmospheric

19.2 Hardware

- Operation principle: capacitive.
- Output: RS-232.
- Standard probe lengths: 700, 1000, 1500 mm.
- Optocoupler isolation on both power and signal circuits.

19.3 Connecting LLS to FMB640

In order to use LLS fuel counter the newest firmware version is needed which can be obtained from Teltonika or a representative. Firmware is updated over GPRS or using cable update method.

The LLS fuel sensor must be connected to the FMB640 device. The FMB640 -LLS fuel sensor schemes are shown below Figure 856.

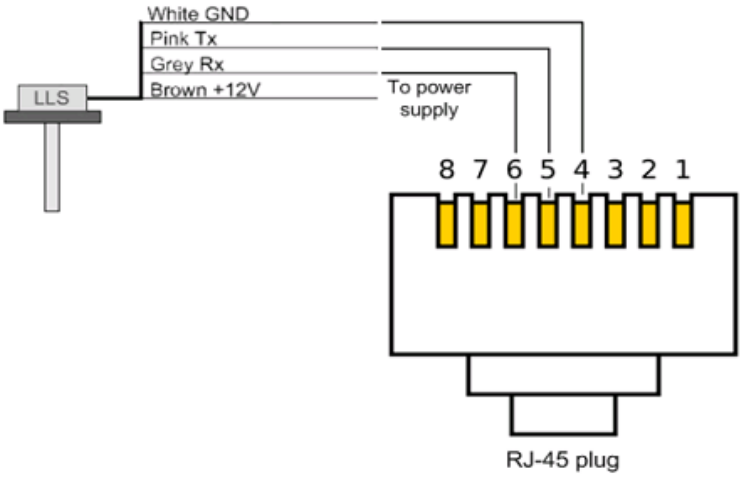

Figure 85
FMB640 -LLS fuel sensor connection scheme RJ-45 male plug

*Teltonika is not responsible for any changes made by the manufacturer, which is not declared in fuel level sensor documentation.

Then FMB640 must be configured. Both fuel level and fuel temperature has to be set up by configurator's I/O menu (see Figure 867):

LLS 1 Fuel Level	kvants or l	None	Low	High	Panic	0	0	Yes	No	Monitoring	1
LLS 2 Fuel Level	kvants or l	None	Low	High	Panic	0	0	Yes	No	Monitoring	1
LLS 3 Fuel Level	kvants or l	None	Low	High	Panic	0	0	Yes	No	Monitoring	1
LLS 4 Fuel Level	kvants or l	None	Low	High	Panic	0	0	Yes	No	Monitoring	1
LLS 5 Fuel Level	kvants or l	None	Low	High	Panic	0	0	Yes	No	Monitoring	1
LLS 1 Temperature	°C	None	Low	High	Panic	0	0	Yes	No	Monitoring	1
LLS 2 Temperature	°C	None	Low	High	Panic	0	0	Yes	No	Monitoring	1
LLS 3 Temperature	°C	None	Low	High	Panic	0	0	Yes	No	Monitoring	1
LLS 4 Temperature	°C	None	Low	High	Panic	0	0	Yes	No	Monitoring	1
LLS 5 Temperature	°C	None	Low	High	Panic	0	0	Yes	No	Monitoring	1

Figure 86 FMB640 I/O Configuration

20 GPRS COMMANDS

It is possible to send commands to FMB640 using GPRS. When FMB640 sends records periodically to a server, a message could be sent from the server and FMB640 will reply to it. FMB640 has to be connected to the server in order to receive commands.

Table 40 GPRS Commands

Command	Description

Command	Description
#GET DATAORDER	Get info about records sorting parameter
#GET RECTO	Get info about records refresh timeout parameter
#GET VERSION	Receive firmware version
#GET NETWORK	Get GSM operator to which device is connected
#GET IMSI	Get IMSI of the device
#GET OUT	Get DOUT values
#DO REPORT	Save a record
#GET ROAMING=Y	Get operator from the list, Y – operator number in a list
#GET REMIP	Get IP and port number from the configuration
#GET AUPX	Get APN, user login and password from the configuration, X – SIMSLOT
#GET REPRT	Get MinPeriod from the configuration
#GET REPDIST	Get MinDistance from the configuration
#GET REPANG	Get MinAngle from the configuration
#GET SENDPERIOD	Get SendPeriod from the configuration
#GET REPMR	Get MinRecords from the configuration
#GET IBTN=X	Get iButton value from the configuration, X – number on the list
#GET EXTERR	Get extended errors value

ATTENTION!
In order to send these commands, they have to be converted to special format. How to convert to this format and for additional information on how to send GPRS commands, please contact to your local sales representative.

21 DEBUG MODE

FMB640 is able to transmit its current state when connected to PC using PORT1/2 and USB cable. To debug FMB640 with USB cable, in terminal you should set high level to DTR pin. It is used to detect errors and provide information to possible solutions when operating as unexpected. Contact our sales manager to get Terminal. After launching it choose baud rate 115200 and hardware control – none. Click on 'Start Log' button and save a new file. Then click 'Connect' to start receiving messages from FMB640 (see Figure 878)

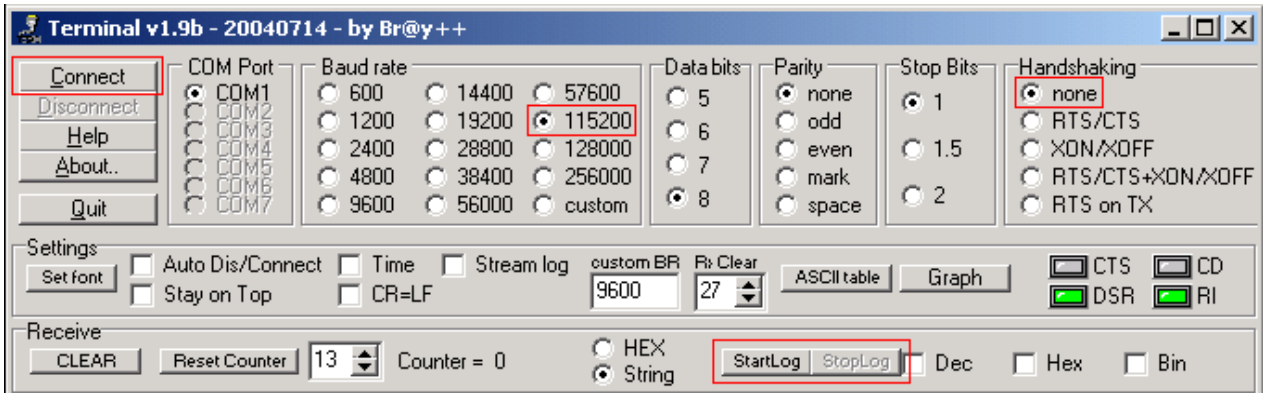

Figure 87 Terminal Window

To debug NMEA GPS data, connect PORT3 cable to COM2 port, or connect PORT2 cable and enable nmea log mode, or via USB cable activating nmea log mode by sending *.log_nmea:1* command in terminal.

22 FMB640 REMOTE LOG

LOG BOOK

Two types of log book: online, offline.
Online log book is initiated using command *log2srv* and set right configuration. Device establish *GPRS* connection and activates link to server, log started to stream to server until set time is elapsed. To stop streaming immediately *log2srvstop* is used.

Offline log book is initiated using command *log2srv* and set right configuration. Device start log writing to flash, this action is performed until set time is elapsed.

To read offline log *log2srvstart* command is used. It sends log to earlier preconfigured server (*log2srv*). Offline log sending also can be terminated using *log2srvstop* command.

COMMANDS

- *"SMSlogin<space>SMSpassword<space>**log2srv**<space><enable>,<mode>,<APN>,<username>,<password>,<IP>,<port>,<TMO>,<Log mode>"*
  - *<enable> - enable (**1**), disable(**0**);*
  - *<mode> -*
    - *silent (**0**) – connect to server and send "Hello" message (all "Terminal" commands can be used)*
    - *echo_time (**1**) – send log with lines, where is TIME "for example: -[2013.1.23 14:49:45]-[PERIODIC.BAN.LIST.INFO]:"*
    - *echo (**2**) – send log with lines where is no TIME "for example: [DIN1.FUNC]->Waiting for DIN1 to be ON"*
    - *echo/echo_time (**3**) – send full log*
    - *modem (**4**) – send just AT commands*
    - *NMEA (**5**) – send NMEA log.*

- *<APN> - operators' APN which will be used for data sending;*
- *<username> - operators' username;*
- *<password> - operators' password;*
- *<IP> - servers' IP address to which offline/online log will be send after request ("log2srvstart");*
- *<port> - servers' port;*
- *<TMO> - indicates time of offline log writing to flash or online log sending to server;*
- *<Log mode> - configuration for online mode (0), configuration for offline mode (1);*

- *"SMSlogin<space>SMSpassword<space>**log2srvstart**"*
- *"SMSlogin<space>SMSpassword<space>**log2srvstop**"*

Example: opa opa log2srv 1,3,banga,,,212.47.99.62,7092,300,0

Note: Up to 5 minutes delay could appear if wrong "*log2srv*" commands settings will be sent, during that time no SMS or GPRS command could be received. SMS will be hanging, after timeout, hanging SMS's will be proceeded.

DOWNLOADING LOG USING "HERCULES" program

STEP 1:

- set special chars – ASCII
- Write down your PORT in the *Port* field and click on *listen* (screen below)

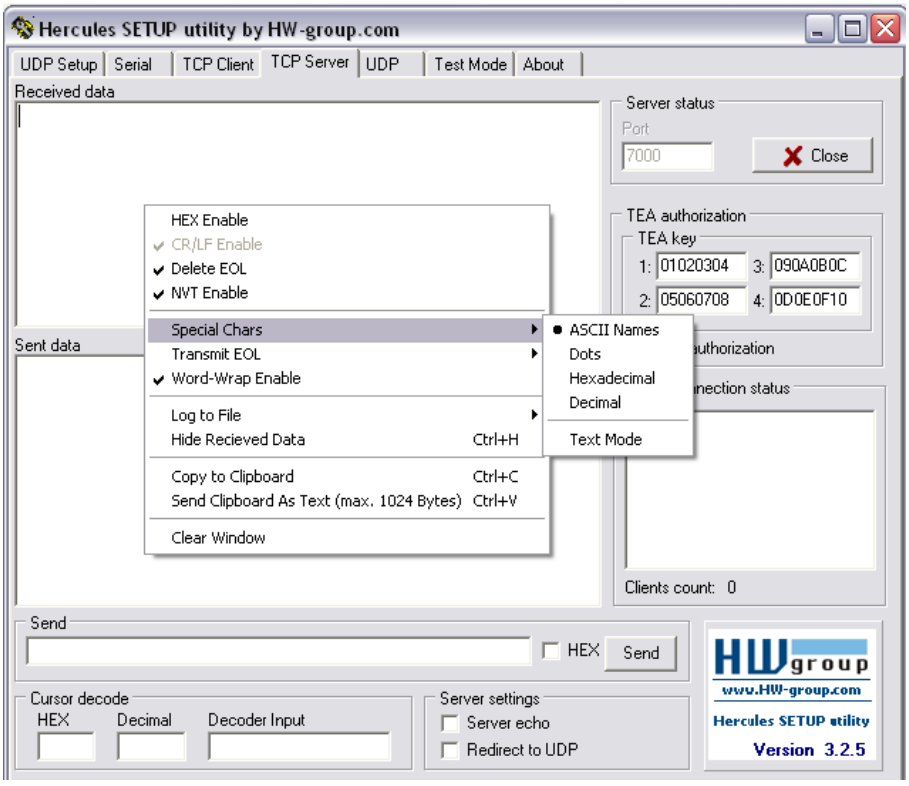

Figure 88 Hercules special chars

STEP 2

- click *Log to File*, then choose the directory where you want to log it in, give your log a name and click *open*
- Right click again and click on *Log Enable* OR just use *Ctrl + L* combination instead.

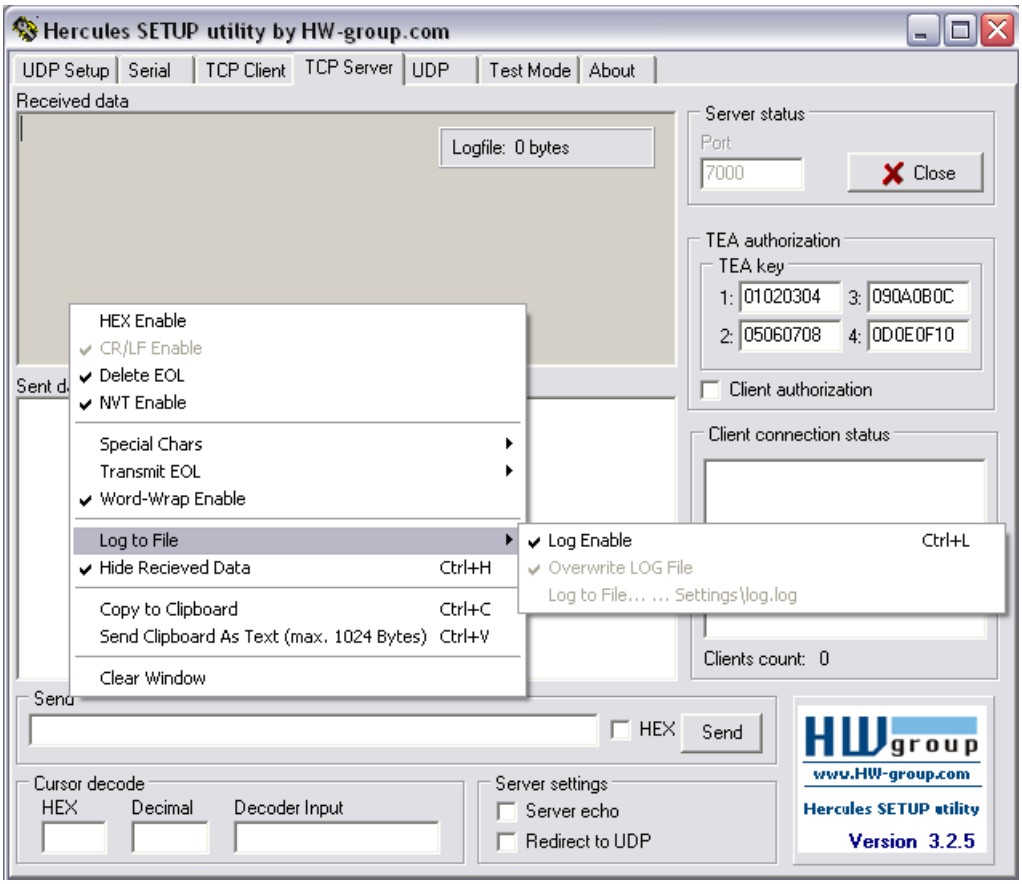

Figure 89 Hercules log to file

STEP 3

- Sending "Terminal's" commands through Hercules server

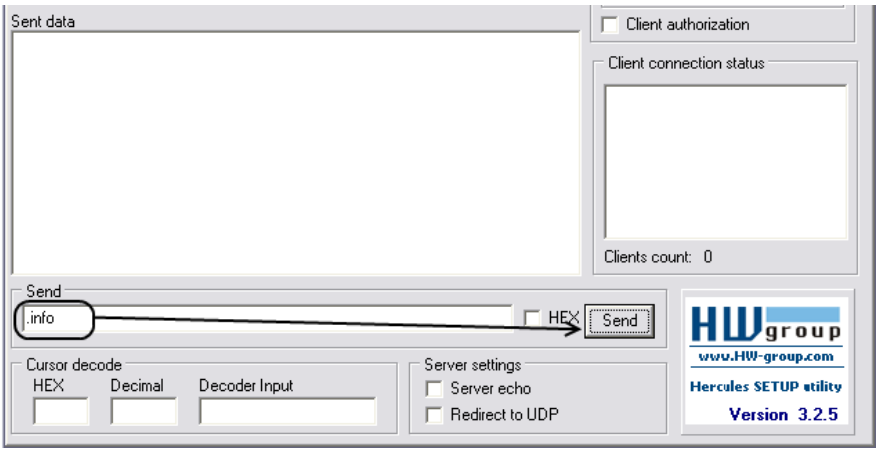

Figure 90 Send command via Hercules

21. MOUNTING RECOMMENDATIONS

22.1 Connecting Wires

- Wires should be connected while module is not plugged in.
- Wires should be fastened to the other wires or non-moving parts. Try to avoid heat emitting and moving objects near the wires.
- The connections should not be seen very clearly. If factory isolation was removed while connecting wires, it should be applied again.
- If the wires are placed in the exterior or in places where they can be damaged or exposed to heat, humidity, dirt, etc., additional isolation should be applied.
- Wires cannot be connected to the board computers or control units.

22.2 Connecting Power Source

- Be sure that after the car computer falls asleep, power is still available on chosen wire. Depending on car, this may happen in 5 to 30 minutes period.
- When module is connected, be sure to measure voltage again if it did not decrease.
- It is recommended to connect to the main power cable in the fuse box.
- Use 3A, 125V external fuse.

22.3 Connecting Ignition Wire

- Be sure to check if it is a real ignition wire – power does not disappear while starting the engine.
- Check if this is not an ACC wire (when key is in the first position, most electronics of the vehicle are available).
- Check if power is still available when you turn off any of vehicles devices.
- Ignition is connected to the ignition relay output. As alternative, any other relay, which has power output, when ignition is on, may be chosen.

22.4 Connecting Ground Wire

- Ground wire is connected to the vehicle frame or metal parts that are fixed to the frame.
- If the wire is fixed with the bolt, the loop must be connected to the end of the wire.
- For better contact scrub paint from the place where loop is connected.

PAY ATTENTION! Connecting the power supply must be carried out in a very low impedance point on-board vehicle network. These points in the car are the battery terminals. Therefore, we recommend connecting the power of FMB640 (wire GND and POWER) directly to the battery terminals. Another valid option is to connect the wires to the main POWER cable inside the fuse box (if there is none, then to the power supply where the fuses of vehicle's computer are), wire GND must be connected in a special point, designed to connect GND vehicle computer. Connecting the GND at an arbitrary point to the mass of the car is unacceptable, as static and dynamic potentials on the line GND will be unpredictable, which can lead to unstable FMB640 and even its failure.

22.5 Connecting Antennas

- Gently connect antennas to device by hands, without using additional equipment like pliers. The tightening torque for fixing the connector must be up to 0.5 – 0.7 Nm ('hand-tightened').
- When placing antennas avoid easily reached places.
- Avoid GNSS antenna placement under metal surfaces.
- Avoid placing FMB640 device near car radio, speakers or alarm systems.
- GNSS antenna must be placed so its state is as horizontal as possible (if antenna is leant more than 30 degrees, it is considered incorrect mounting).
- GNSS antenna cable cannot be bent more than 80 degrees.
- GNSS antenna must be placed sticker facing down

Figure 91 Anthenna

It is recommended to place GNSS antenna behind dashboard as close to the window as possible. A good example of GNSS antenna placement is displayed in a picture below (area colored green).

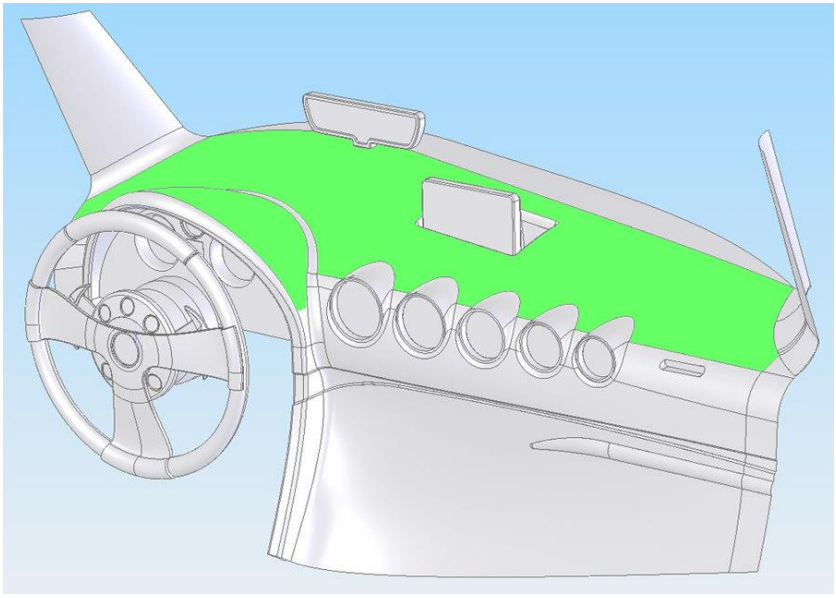

Figure 92: Correct placement of FMB640

22.6 Module Installation

- Module should not be seen or easily reached.
- Module should be firmly fixed to the surface or cables.
- Module cannot be fixed to heat emitting or moving parts.
- SIM card should be inserted in the module while the connector is plugged off (while module has no power).

23 EC DECLARATION OF CONFORMITY

24 WARRANTY POLICY

Teltonika provides a One (1) year manufacturer's warranty, which covers all of Teltonika products.

Batteries are covered by 6 month warranty support.

25 CHANGE LOG

No.	Date	Version	Comments
1	2018-05-28	v1.0	Initial Release